FINN CORPORATION®

Activate Your Warranty By Registering TODAY!!!

9281 LeSaint Drive • Fairfield, Ohio 45014
Phone (513) 874-2818 • Fax (513) 874-2914
Sales: 1-800-543-7166

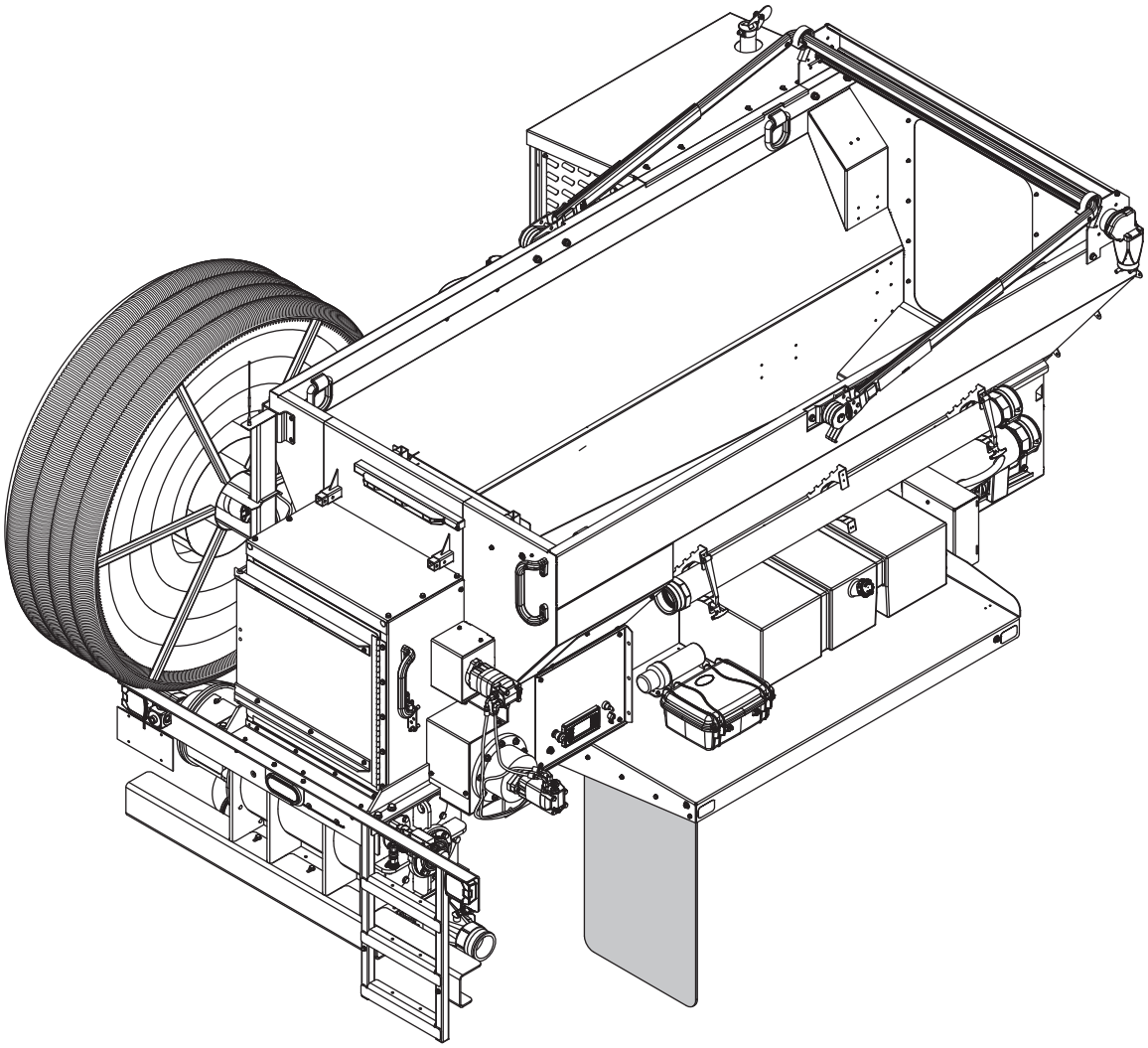

MBH6 Material Blower

Operator Instructions and Parts Manual

Item **A2548-002** Serial No. _____

MBH6 OD0201

FOR OFFICE USE ONLY		
DATE	**UPDATE DESCRIPTION**	**CODE**
02/01/23	Initial release	OD0201

ACTIVATE YOUR FINN EQUIPMENT WARRANTY

☞ It is the responsibility of the Finn Dealer to register your Finn Equipment shortly after the equipment start-up and operation overview at which time you will be asked to sign off on the **WARRANTY VALIDATION FORM**.

Be sure to confirm with your sales representative that this has been done.

This registration process activates the Finn Limited Warranty.

What should you do if you need repairs or parts under Warranty?

How to get parts and or repairs done under warranty:

Notify **YOUR DEALER** immediately when you discover a faulty material, workmanship, or faulty component. **Do not** wait weeks or months to get it reported. Be sure to tell the dealer that this is a failure that occurred under warranty.

NOTE: Warranty work must be done by a Finn Authorized Dealer in order to be covered by the Finn Warranty Program, unless otherwise approved by the Finn Warranty Administrator.

Instructions to Dealer on processing warranty work:

Initiating a claim

1. Be sure to have the model, serial number and number of hours on unit.
2. A description of the problem as understood at the time.
3. Call Finn's Warranty Administrator to secure warranty claim authorization number.
4. Confirm with Warranty Administrator that the unit is eligible for warranty coverage.
5. Any parts needed for the repair work should be placed with the Warranty Administrator instead of the parts department. These will be shipped to you at no charge pending the outcome of the investigation.
6. Labor hours must coincide with the published "Labor Schedule" or estimate approved by the Finn Warranty Administrator.
7. Once work is done, a Finn Warranty Claim Form must be filled out and emailed along with any related receipts or invoices to the Warranty Administrator. We ask that this is done ASAP after work is completed.

Faulty or failed parts:

IF Finn wants you to return failed parts, you will receive a return shipping label in the package with new parts. On that Label will be marked a return authorization number. (Which is the same number as you claim number.)

Please also mark the outside of the package that you are shipping back (using a marker) with the claim/return number. **THESE PARTS MUST BE RETURNED WITHIN 10 DAYS!** Failure to do so can void warranty coverage.

NOTE: Further information and related forms can be found on the Finn Web site in the Dealer Portal warranty section.

WARRANTY PERIOD

Hydroseeders® and Straw Blowers: 2 years or 2000 hours, whichever comes first.

Bark Blowers: 1 year or 1200 hours, whichever comes first.

COMMERCIAL LIMITED WARRANTY

EFFECTIVE 01/01/2018

OUR WARRANTY TO YOU

Finn Corporation warrants to you, the original purchaser, for use (or rental to others for use) and to a second owner who purchases a used machine from an Authorized Dealer Rental Program (the remaining warranty), all new construction machinery, parts and attachments (except those referred to herein) that are manufactured by Finn to be free from defects in material and workmanship for a period noted above. Replacement parts provided under the terms of this warranty are warranted for the remainder of the warranty period applicable to the product to which parts are installed, as if parts were original components of the product.

TO QUALIFY FOR WARRANTY CONSIDERATION

A. Your Finn Dealer will register your equipment with Finn. **FAILURE TO REGISTER WILL VOID THE WARRANTY.**
B. Notify your dealer same day or next day of any need for work under warranty.
C. Warranty work must be done by an authorized Finn dealer or service provider of Finn's choice and any parts must be ordered through the Finn warranty administrator.

WHAT FINN WILL DO

Upon notification to Finn concerning a failure of material or workmanship in accordance with the above stated Warranty, Finn Corporation will:

A. Verify claim falls within the valid warranty time frame.
B. Verify the product and equipment has been registered with Finn.
C. Upon affirmation of warranty period and registration, Finn will provide new or repaired replacement part(s), whichever Finn elects and a return shipping label for returning failed parts if applicable.
D. Evaluate the part when defective part is returned. If damage to a part is determined not to be covered under the warranty, the customer will be billed.
E. Reconcile costs with customer for parts and shipping, as determined by our inspection of failed parts, and confirmation of warranty coverage, per the terms of this warranty.
F. Correction of nonconformities, in the manner provided above, shall constitute fulfillment of all liabilities of Finn Corporation.

WHAT THE WARRANTY DOES NOT COVER

1. Normal wear parts, Allied Equipment, trade accessories not manufactured by Finn, such as but not limited to items such as various filters, fluids, brakes, clutch linings, coupler insert, belts, hoses, light bulbs, mechanical seal, over center clutches, tires, ignitions, starters, batteries, carburetors, engines or like or unlike equipment or accessories. (Such being subject to the warranty, if any, by their respective manufacture).
2. Secondhand, used, altered, or rebuilt machines or parts.
3. Defects, malfunctions or failures resulting from accidents, abuse, misuse, improper servicing, or neglect of required operational guidelines and maintenance service, as outlined in the Finn Corporation's Operators Manual(s).
4. Any defect or failure of products warranted arises out of or is caused by accessories or parts not manufactured or supplied by Finn Corporation, whether same are supplied by purchaser, dealers, or any other party.

STORAGE

Dealers and customers are responsible to follow all guidelines related to Seasonal and Long Term Storage of Equipment, as advised in operation and equipment manuals. i.e. Finn, Engine, Clutch, Pump, Motor, etc. Equipment failures caused by neglect of these guidelines are not warrantable.

THIS IS THE ONLY EXPRESS WARRANTY ON OUR PRODUCTS

We neither assume nor authorize anyone to assume for us any other express warranty. The Distributor/Dealer has no authority to make any representation or promise on behalf of Finn Corporation or to modify the terms or limitations of this warranty in any way.

THIS WARRANTY THEREFORE SHALL BE IN LIEU OF ALL OTHER WARRANTIES, EXPRESS OR IMPLIED, INCLUDING, BUT NOT LIMITED TO, ANY IMPLIED WARRANTY OF MERCHANTABILITY OR FITNESS FOR A PARTICULAR PURPOSE.

LIMITATIONS ON OUR RESPONSIBILITY WITH RESPECT TO PRODUCTS PURCHASED

THE REMEDIES OF THE USER SET FORTH HEREIN ARE EXCLUSIVE, WITHOUT REGARD TO WHETHER ANY DEFECT WAS DISCOVERABLE OR LATENT AT THE TIME OF DELIVERY OF THE PRODUCT TO THE PURCHASER.

ALL WARRANTY REPAIR MUST BE DONE BY A FINN AUTHORIZED SERVICE PROVIDER OR AUTHORIZED REPAIR SHOP OF FINN'S CHOICE.

TRANSPORTATION, HAULING, STORAGE, OR OTHER SIMILAR COSTS ARE NOT PART OF FINN'S OBLIGATION UNDER THE LIMITED WARRANTIES AND IS THE RESPONSIBILITY OF THE EQUIPMENT OWNER.

THE ESSENTIAL PURPOSE of this exclusive remedy shall be to provide the original purchaser with repair or replacement of parts that prove to be defective within the period and under the conditions previously set forth. This exclusive remedy shall not have failed of its essential purpose (as that term is used in the Uniform Commercial Code) provided Finn remains willing to repair or replace defective parts within a commercially reasonable time after it obtains actual knowledge of the existence of a particular defect.

IN NO EVENT shall Finn be liable for any special, consequential, incidental or indirect damages, including lost profits or lost commercial opportunities, with respect to the sale of the above warranted product or anything done in connection therewith, or for property damage sustained by a person claiming to be a third party beneficiary of a surviving warranty under the law of any jurisdiction.

NOTICE

FINN CORPORATION URGES the use of only Finn corporation supplied parts and attachments to assure proper performance and safe operation of Finn corporation equipment. Insist on parts and attachments manufactured or supplied by Finn corporation when you purchase, repair or replace your Finn equipment and attachments. Finn corporation cannot assure that parts and attachments not manufactured or supplied by Finn meet Finn corporation's quality standards, specifications, or operating requirements. Our warranty is not effective to the extent any failure of or defect in a Finn corporation product arises from or is caused by parts, attachments or components not originating with Finn corporation. Use of Finn corporation equipment with parts and attachments not manufactured or supplied by Finn could result in personal injury and void warranty coverage.

INDEX

Continued to next page.

INDEX

SAFETY FIRST

With any piece of equipment, new or used, the most important part of its operation is **SAFETY!**

FINN Corporation encourages you and your employees to familiarize yourselves with your new equipment and stresses safe operation.

The first pages of this manual are a summary of the main safety aspects associated with this unit. Be sure to read and understand completely before operating the machine.

The symbols below are used throughout the operation and maintenance sections of this manual to call attention to safety procedures.

⚠ DANGER ***Danger indicates an imminently hazardous situation which, if not avoided, WILL result in death or serious injury.***

⚠ WARNING ***Warning indicates a potentially hazardous situation which, if not avoided, COULD result in death or serious injury.***

⚠ CAUTION ***Caution indicates a potentially hazardous situation which, if not avoided, MAY result in minor or moderate injury.***

NOTICE ***Notice indicates important information, that if not followed, MAY cause damage to equipment.***

NOTE: This is helpful information.

The **DANGER**, **WARNING**, **CAUTION** and **NOTICE** notifications and instructions in this manual *cannot* cover all possible conditions and situations that may occur.

It must be understood by the operator that caution is a factor which *cannot* be built into this product; caution must be supplied by the operator.

CALIFORNIA PROPOSITION 65

⚠ WARNING ***The engine exhaust and some of its constituents are known to the State of California to cause cancer, birth defects, and other reproductive harm. Wear protective equipment. To minimize exposure, avoid breathing exhaust. Service your vehicle in a well-ventilated area and wear gloves or wash your hands frequently when servicing your vehicle.***

⚠ WARNING ***Breathing diesel engine exhaust exposes you to chemicals known to the State of California to cause cancer and birth defects or other reproductive harm.***

- ***Always start and operate the engine in a well-ventilated area.***
- ***Do not modify or tamper with the exhaust system.***
- ***Do not idle the engine except as necessary.***

⚠ WARNING ***Drilling, sawing, sanding or machining wood products can expose you to wood dust, a substance known to the State of California to cause cancer. Avoid inhaling wood dust or use a dust mask or other safeguards for personal protection.***

⚠ WARNING ***Battery posts, terminals, and related accessories contain lead and lead compounds, chemicals known to the State of California to cause cancer and reproductive harm. Wash hands after handling.***

⚠ WARNING ***This product can expose you to chemicals, including lead, which are known to the State of California to cause cancer and birth defects or other reproductive harm. Go to www.P65Warnings.ca.gov for more information.***

MATERIAL BLOWER SAFETY SUMMARY SECTION

It is important that all operators of this machine are familiar with all the safety aspects mentioned below before operating the machine. Always keep a copy of this manual with the machine. It is the responsibility of the operator of the machine to fully understand this safety section. Remember that YOU are the key to safety. Good safety practices protect not only you but also the people working with and around you. Keep in mind that this safety sheet is written for this type of machine only. Practice all other usual and customary safe working precautions; and above all, remember that safety is up to you.

I. PRE-START EQUIPMENT CHECK (equipment check is to be made with the engine off)

1. If you have a chassis-mounted unit, check devices securing unit to the truck or trailer frame.

   If the unit is a trailer unit, check hitch and hitch bolts, lights, brakes, and all safety components. Verify that the hitch ball or pintle hook is the correct size for the coupler.

2. Verify that all guards are in place.
3. By carefully looking into the blower hopper and transition, inspect for and remove any foreign objects. Follow Occupational Safety and Health Administration (OSHA) lockout/tagout procedure (29 CFR 1910.147)
4. Inspect all hydraulic hoses and tubes for cracks, bulges, or damage. If hose is cracked, bulging, or damaged, replace immediately.
5. Inspect the material discharge hose and connections for cracks or damage. If cracks or damage are found, replace affected part immediately.

II. MACHINE OPERATION

1. Always wear safety goggles when operating and/or feeding the machine. Other safety attire, such as safety shoes, ear protection, gloves, hard hats, dust masks, etc., should be worn as required by warning decals on machine, operator's manuals, or job site requirements. Remove rings, watches, etc. Avoid wearing loose-fitting clothing that may get caught in rotating machinery.
2. Do not override or tamper with the safety-shutdown switches on the airlock door or discharge. If switches fail, use OSHA lockout/tagout procedure (29 CFR 1910.147) until switches are repaired or replaced.
3. Do not operate the machine without all guards in place.

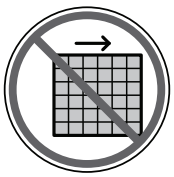

4. Never attempt to connect, or disconnect the discharge hose while the engine is running.
5. Make sure that no one is working in or on the machine. Make sure the discharge area is clear of all persons, animals, etc. Signal visually or audibly that all is clear before starting the engine. Keep unauthorized personnel away from the machine and discharge hose at all times.

6. The driver of the towing vehicle is responsible for the safety of the operator(s) and feeder(s) of the machine. Make sure the driver is aware of and avoids all possible hazards, such as tree limbs, low power lines, etc.
7. Do not allow anyone to ride on the trailer or any other part of the unit for any reason.

8. Never operate machine in an enclosed area without venting the engine exhaust of both the equipment and vehicle on which the equipment is mounted. Deadly carbon monoxide fumes can accumulate.

9. Never operate this or any other machinery when fatigued, tired, under the influence of alcohol, illegal drugs, or medication. You must be in good physical condition and mentally alert to operate this machine.

10. Never modify the machine. Never remove any part of the machine (except for service and then reinstall before operating).

11. During application through the hose, high pressure can be exerted at the end of the hose. Hose-holding personnel must establish good footing. The operator should only increase the engine RPM which increases the volume of air in the hose only after hose-holding personnel are firmly positioned and have firm control of the hose. Additional personnel to direct hose may be necessary if working on slopes. The proper technique for grasping the hose used by hose-holding personnel is to route and firmly grasp the hose over the shoulder or under both arms. Never route/hold the hose so it goes between the legs. If the hose-holding personnel finds that it is uncomfortable for him to handle the hose by himself, additional hose holders should be positioned at the end of the hose.

12. The blower discharges material at pressures and velocities that can cause severe bodily injury. Do not aim discharge at people, animals, etc. Only aim the discharge at the intended discharge area. Unless properly protected, do not place hand into the discharge stream.

13. Do not open any doors or access panels while machine is in operation. Severe injury may result from rotating parts.

14. Do not attempt to pull anything out of the blower hopper while machine is in operation. Shut down and lockout the engine using the OSHA lockout/tagout procedure (29 CFR 1910.147) before removing any foreign objects. Signal visually and audibly that all is clear before operating the machine.

15. When leaving the blower unattended for any reason, be sure to:

    A. Shut off the material feed system using the **FLOOR** controls on the control panel or **MATERIAL** controls on the remote.

    B. Shut off vehicle engine and blower engine.

    C. Place transmission of the vehicle in “NEUTRAL” or “PARK”.

    D. Set parking brake firmly.

    E. Remove keys from blower unit.

    F. Lock vehicle cab and take all keys with you.

    G. If parked on a steep grade, block the wheels.

    These actions are recommended to avoid unauthorized use, runaway, vandalism, theft, and unexpected operation when the equipment is unattended.

16. Do not read, eat or otherwise lose or lessen your attention in any manner while operating the blower. Operating this equipment is a full-time job.

17. Be careful in getting on and off the blower, especially in wet, icy, snowy, or muddy conditions. Clean mud, snow, or ice from steps, fenders, and footwear.

18. All personnel operating in/or around the machine must be aware that the blower can be controlled via remote control. For safety reasons and to prevent accidental starting, always keep the Emergency Stop (e-stop) button depressed on the remote control hand held unit when unit is not being used.

19. Be careful when operating the tarp near power lines. Raising the tarp into power lines may cause severe electrical shock. Always have the tarp either fully open or retracted when transporting the machine.

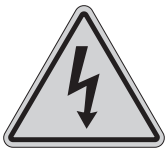

20. Turn slowly and travel carefully on rough surfaces and side slopes, especially with a loaded unit.

21. The battery charger for the machine remote may be in an enclosure (toolbox or remote case). Keep the surrounding area of the enclosure well ventelated. Do not cover the enclosure in any way. Open the enclosure carefully: if damage to the battery has occured, battery acid can be harmful.

III. MAINTENANCE

1. Before servicing the machine, turn off engine and allow all moving parts to stop. To prevent accidental starting, disconnect battery cables. Tag the engine operating area to show that the machine is being serviced. Use lockout/tagout procedure (OSHA 29 CFR 1910.147).

2. Take extreme care when adjusting or replacing knives. Knife edges are very sharp and can cause severe bodily injury.

3. Radiator maintenance: Liquid cooling systems build up pressure as the engine gets hot. Before removing radiator cap, stop the engine and let the system cool. Remove radiator cap only after the coolant is cool.

4. Battery maintenance: Lead-acid batteries contain sulfuric acid, which will damage eyes or skin on contact. Always wear a face shield to avoid getting acid in the eyes. If acid contacts the eyes, flush immediately with clean water and get medical attention. Wear rubber gloves and protective clothing to keep acid off skin. Lead-acid batteries produce flammable and explosive gasses. Keep arcs, sparks, flames, and lighted tobacco away.

5. Filling of fuel: Never fill the tank with the engine running, while smoking, or when near an open flame. Never smoke while handling fuel or working on the fuel system. The fumes in an empty fuel container are explosive. Never cut or weld on or near fuel lines, tanks or containers. Move at least 10 ft. (3 m) away from fueling point before starting engine. Wipe off any spilled fuel and let dry before starting engine.

   IMPORTANT: Be careful not to allow fuel, lubricant, hydraulic fluid, or cooling fluids to contaminate the surrounding environment. Collect all fluids and dispose of them properly.

6. It is recommended that only authorized, genuine FINN replacement parts be used on the machine.

7. Do not use ether cold start fluid, if engine is equipped with glow plug-type preheater, or other intake manifold-type preheater. It could cause an explosion or fire and severe injury or death.

8. Diesel fuel or hydraulic fluid under pressure can penetrate the skin or eyes and cause injury, blindness, or death. To check for such leaks, use a piece of cardboard or wood instead of your hand. Pressure may build up in the hydraulic system; use caution when removing the cap.

9. Some parts and assemblies are quite heavy. Before attempting to unfasten any heavy part or assembly, arrange to support it by means of a hoist by blocking or by use of an adequate arrangement to prevent it from falling, tipping, swinging, or moving in any manner. Failure to do so could result in component damage, or physical injury to someone.

10. If repairs require use of a torch or electric welder, be sure that all flammable and combustible materials are removed. Fuel or oil reservoirs must be emptied, steam-cleaned, and filled with clean water before any cutting or welding on them is attempted. Do NOT weld or cut on any tank containing oil, gasoline, fumes, other flammable material, or on any container of which the previous contents were unknown.

11. Do not pressure wash this unit. Do not pressure wash around any control boxes, radio remotes or control panels. Pressure washing this unit can cause damage to the electrical systems and components and also cause the unit to not function. Pressure washing injects water into sensitive electrical components. To clean the unit, use a method that controls the amount of water that is applied to the surface of the unit.

COMMON SAFETY SYMBOLS


Hazard/ Attention

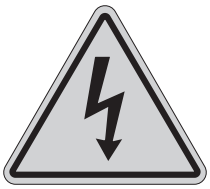
Electrical Shock Hazard


Hearing Hazard


Arc Flash Hazard or Explosion Hazard


Electrocution Hazard


Fire Hazard


Body Entanglement Hazard


Electrostatic Discharge Hazard


Fumes/Dust Hazard


Burn Hazard

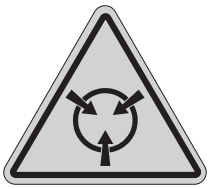
Electrostatic Sensitive Area Hazard


Pinch Point/ Entanglement Hazard

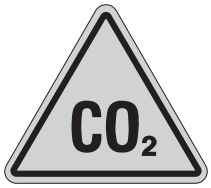

Carbon Dioxide Hazard


Explosive or High Pressure Hazard


Grounding Required Hazard


Corrosive Hazard


Explosive Material Hazard


Crush Hazard


Cut/Crush Hazard


Vision Damage Hazard


Crush/Pinch-point Hazard


Cut/Sever Hazard


Vision and Hearing Damage Hazard


Crush/ Entrapment Hazard


Sever/Reach Hazard


Vision, Hearing and Respiratory Damage Hazard


High Voltage Hazard

COMMON SAFETY SYMBOLS

Heavy Object Hazard

Hot Surface Hazard

Loose Clothing Entanglement Hazard

Pinch Point/ Moving Belt Hazard

Poison Hazard

Radio Frequency Hazard

Remote Start Hazard

Sever by Rotating Parts Hazard

Rotating Shaft Hazard

Skin Puncture Hazard

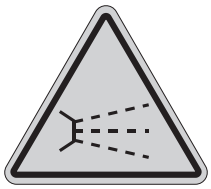

Splash/Spray Hazard

Stumble Hazard

Trip Hazard

Watch Head/ Overhead Hazard

Fall/Loss of Balance Hazard

Battery Charging in Enclosed Area Hazard

Mandatory Operator Action Required

Read Manual

Breathing Protection Required

Vision Protection Required

Hearing Protection Required

Vision, Hearing and Head Protection Required

Breathing, Vision, Hearing and Head Protection Required

Foot Protection Required

Lockout/ Tagout Procedure Required

Gloves Required

Trailer Safety

COMMON SAFETY SYMBOLS


Lift Point

Do Not Ride on Moving Vehicle

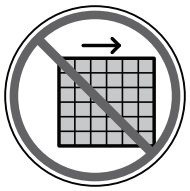
Do Not Remove Guards


Do Not Obstruct or Block


Do Not Spray Power Lines


Do Not Touch


Do Not Pressure Wash

SAFETY DECAL EXAMPLES

DANGER

ENTANGLEMENT HAZARD!
Keep arms and feet out!
Never climb on or in unit before turning engine off.
Allow all moving parts to stop.
Disconnect battery cables and follow proper lock-out and tag-out procedures.
Failure to comply will result in death or serious injury.

WARNING

FLYING OBJECTS!
STAY BACK!
Stay away from discharge area during operation. Keep bystanders away.
DO NOT point discharge toward people, animals or property.
ALWAYS wear appropriate protective gear.
Failure to comply could result in death or serious injury.

DANGER
DO NOT ENTER!

ENTANGLEMENT HAZARD! MOVING MACHINERY!
Keep arms and feet out!
CONFINED SPACE HAZARD! (Reference: OSHA 29 CFR 1910.146)
Before entering:

1. Empty, flush and ventilate box interior.
2. Allow all moving parts to stop.
3. Turn off engine and disconnect battery cables.
4. Continuously ventilate area or wear appropriate breathing apparatus.
5. Provide standby individual outside box able to communicate with person inside and remove him with lifeline if necessary.

FAILURE TO COMPLY WILL RESULT IN DEATH OR SERIOUS INJURY.

DANGER

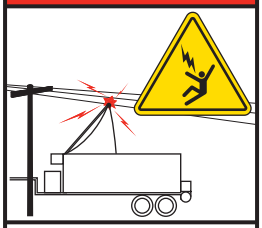

ELECTROCUTION HAZARD!
DO NOT raise tarp under high voltage lines.
Failure to comply will result in death or serious injury.

WARNING

Wear proper eye protection when operating machine.
Failure to comply could result in death or serious injury.

DANGER

SEVER HAZARD!
Keep hands and feet out!
Sharp knives will sever.
Failure to comply will result in death or serious injury.

OPERATION AND MAINTENANCE MANUAL FOR FINN MATERIAL BLOWER

INTRODUCTION

The FINN Corporation would like to thank you for your latest FINN purchase. In our efforts to maintain a quality and growing relationship with every customer, we would like to encourage you to contact us for help with service, genuine replacement parts, or for any other information you may require.

THE FINN MATERIAL BLOWER AND ITS FUNCTION

The FINN Material Blower is an apparatus for conveying and discharging bulk materials, such as bark mulch, at a fast and uniform rate utilizing a minimum amount of manpower. The product to be used is generally composted and processed, then used as a soil amendment, a ground cover for erosion and weed control, or for decorative purposes on landscaping (bark mulch).

This manual is intended to provide step-by-step instructions on the operation, care, and maintenance of the Material Blower. In addition, it contains illustrations and a complete list of parts and components for easy identification.

HOW THE MATERIAL BLOWER WORKS

The bulk material is loaded into the hopper by a loader or by a feed elevator. Located at the bottom of the hopper is a drag chain conveyor that conveys the bulk material to an opening, in the rear of the hopper, containing a feed roll. The feed roll and drag chain conveyor feed the bulk material into an airlock. The airlock is specifically designed and built to handle tough, fibrous material. The function of the airlock is to take the bulk material into open pockets exposed to the outside air and to convey it to an area where the pocket is closed off. At that point a high volume/ low pressure air stream, created by the blower, is channeled through the pocket, carrying the material out of the airlock and through the hose for discharge.

NOTICE ***For best results and to ensure safe operation and long life of the equipment, please read and follow all instructions carefully.***

TOWING VEHICLE (*FOR UNITS MOUNTED TO A TRAILER*)

The truck used to tow the FINN material blower must be equipped with a 2-5/16 in. ball-type or pintle-type hitch. This hitch should be mounted as near to the end of the truck bed as possible. The tow vehicle should be fully wired for trailer marker, turn, and stop lights, as well as electric brakes, and be sized to be able to pull and stop a 12,585 lbs. (5,708 kg) trailer. (Loaded material blower assuming 750 lbs./yd.^{3} mulch.)

NOTE: When towing tandem axle unit, always ensure the unit is level, applying equal weight distribution across both axles.

⚠ CAUTION ***Ensure proper weight distribution and make sure the material blower is properly supported by the towing vehicle. Failure to comply could result in minor or moderate personal injury. Failure to comply could also result in product or property damage.***

MOUNTING THE MATERIAL BLOWER

A complete mounting kit is provided with the unit.

Before selecting a chassis for the Material Blower, carefully review this manual and consider the following:

A. Never exceed either the Gross Axle Weight Rating (GAWR) or the Gross Vehicle Weight Rating (GVWR) for the chassis.

B. Install the Material Blower only onto a vehicle with cab-to-axle dimension sufficient to fully support the Material Blower frame length.

C. Position the Material Blower such that the required clearance zones are maintained.

Once the proper carrier has been selected, the blower must be securely mounted onto it.

⚠ WARNING ***The FINN Material Blower should be mounted by a qualified truck body installer. Failure to comply could result in personal injury. Failure to comply could also result in product or property damage.***

⚠ WARNING ***Install/Mount the FINN Material Blower in compliance with the vehicle ratings, machine mounting requirements and applicable laws. Failure to do so could result in personal or property damage.***

NOTICE ***The mounting of the blower to the truck must allow for tire clearance as well as frame twist.***

Follow mounting instructions given in the Truck Mounting/Loading Information section. Consult truck manufacturer for proper truck sizing and mounting recommendations. If mounting conditions require deviation from these instructions, consult the factory.

MOUNTING/LOADING INFORMATION

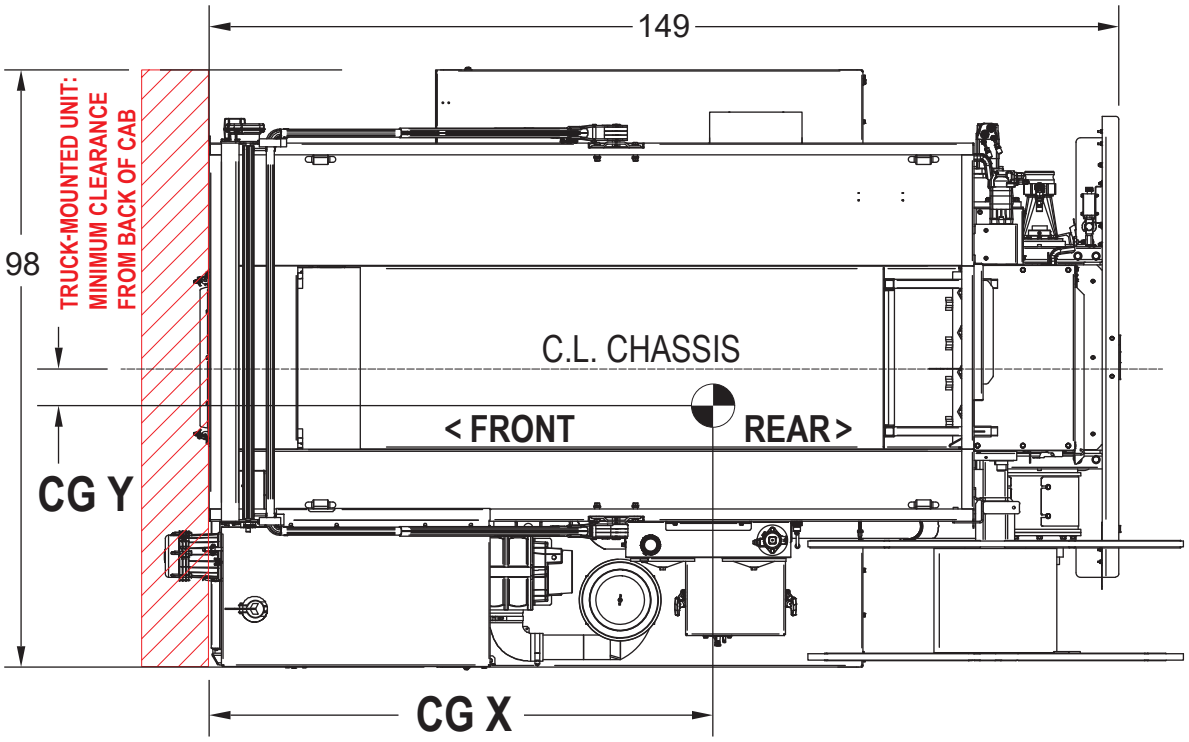

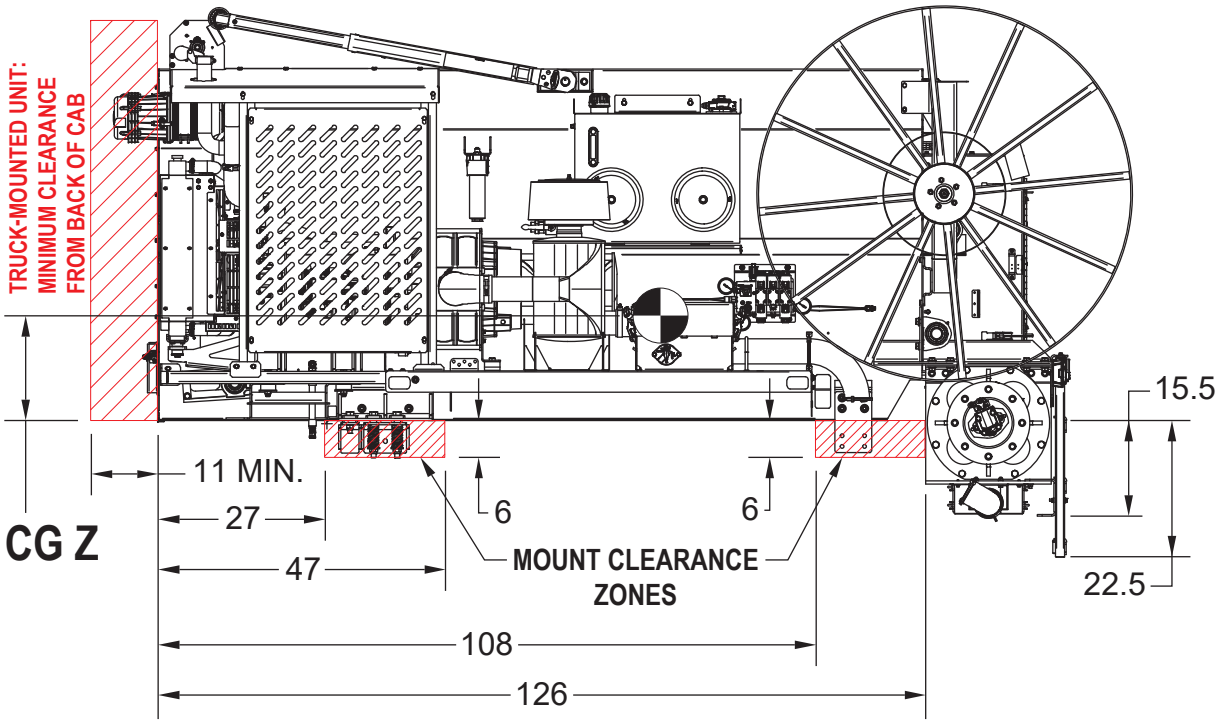

MOUNTING/LOADING INFORMATION (CONTINUED)

DESCRIPTION	CG X	CG Y	CG Z	WEIGHT
MBH6 (No Material)	82.5 in.	9 in.	18.75 in.	7,169 lbs.
MBH6 (Full, 6 yard)*	74 in.	3 in.	26 in.	12,275 lbs.
Maximum Capacity Rating	-	-	-	5,106 lbs.

* Assumes six (6) yards of mulch weighing 851 lbs./cu. yd.

NOTE: All dimensions are in inches; drawings are not to scale.

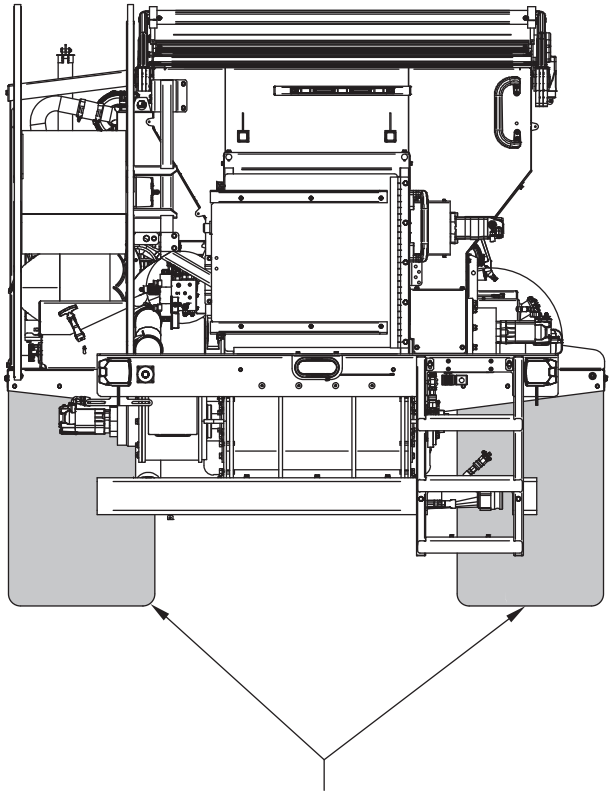

MUD FLAPS

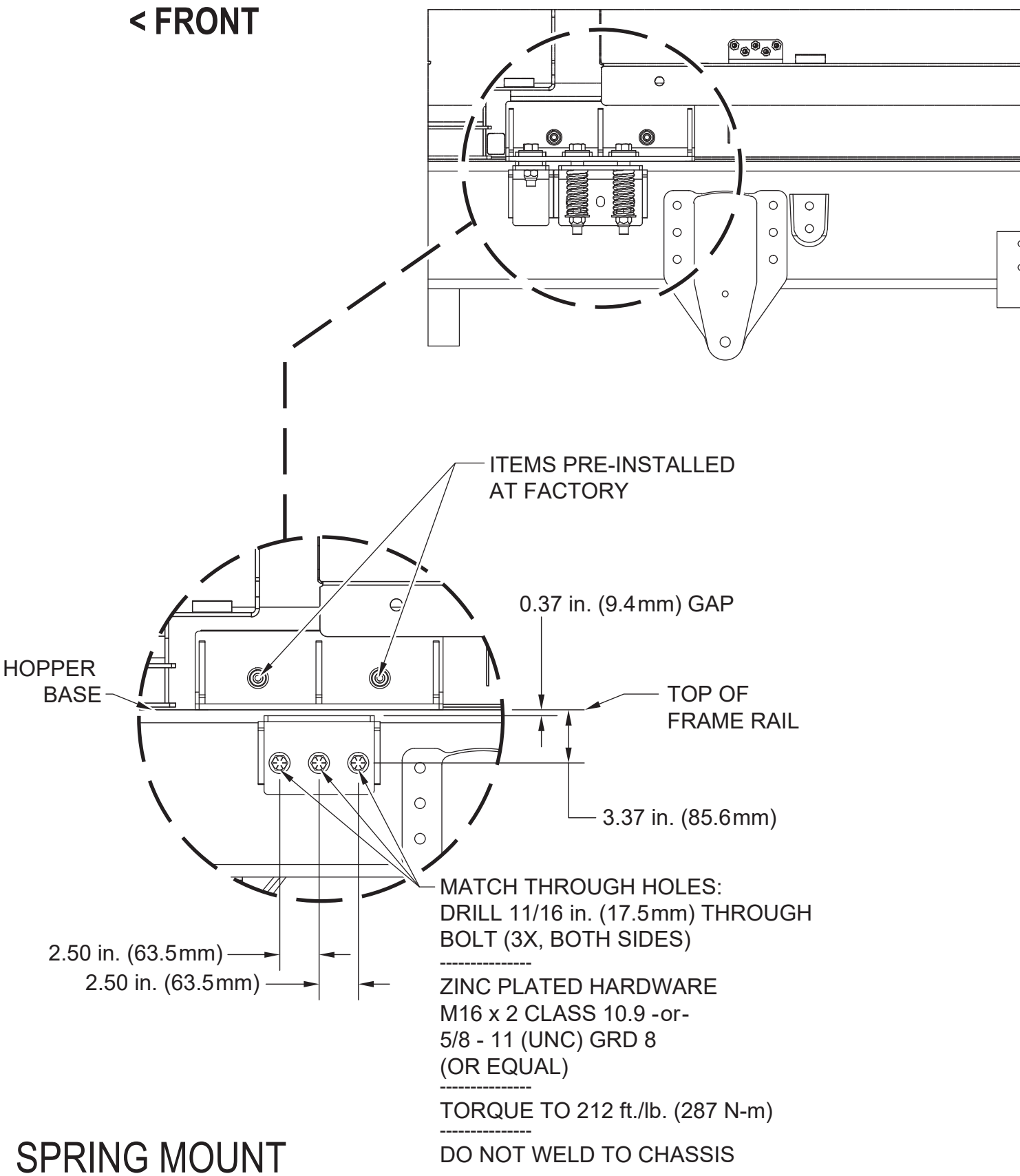

SPRING MOUNT

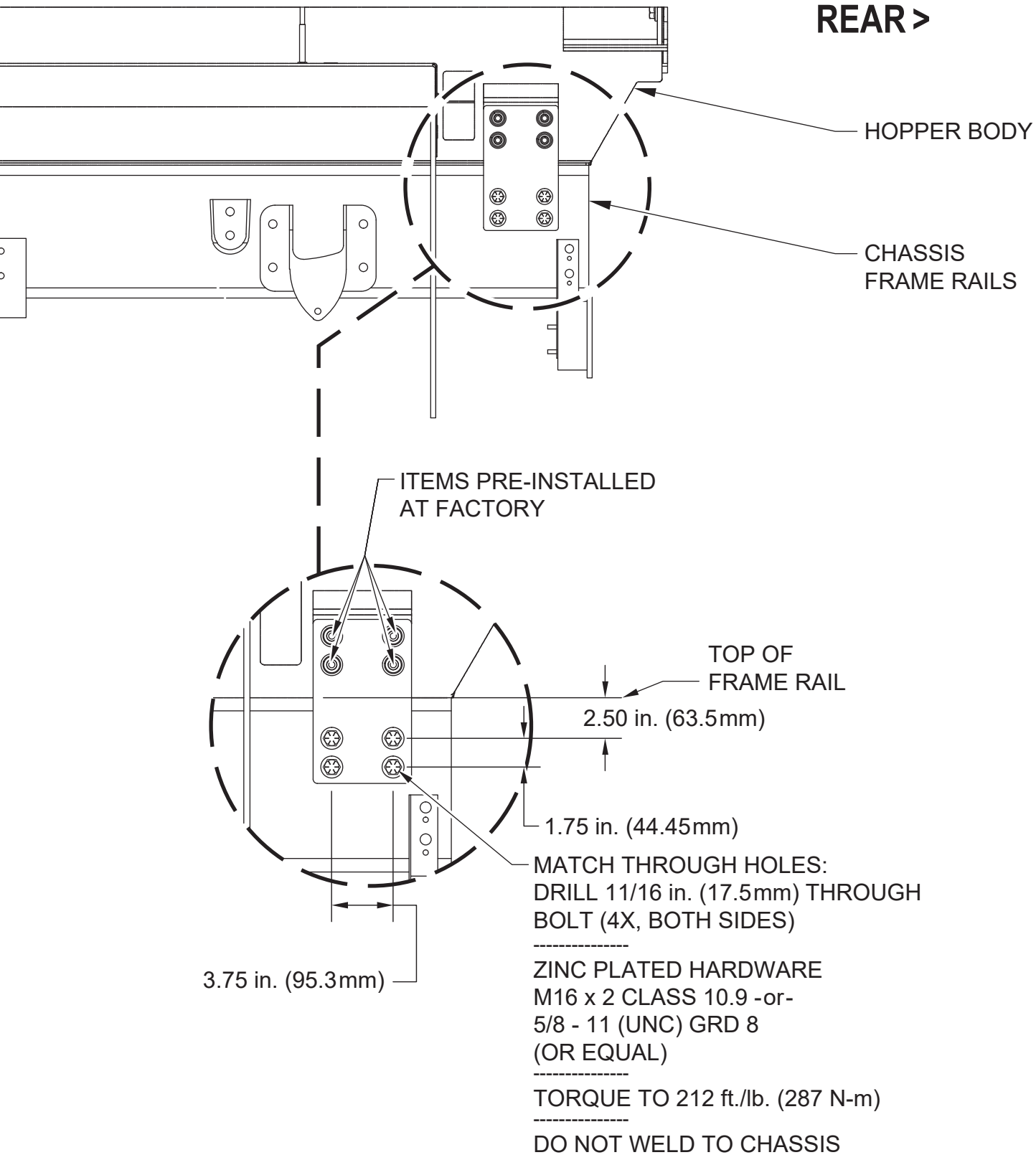
REAR >
HOPPER BODY
CHASSIS
FRAME RAILS
ITEMS PRE-INSTALLED
AT FACTORY
TOP OF
FRAME RAIL
2.50 in. (63.5mm)
1.75 in. (44.45mm)
MATCH THROUGH HOLES:
DRILL 11/16 in. (17.5mm) THROUGH
BOLT (4X, BOTH SIDES)

ZINC PLATED HARDWARE
M16 x 2 CLASS 10.9 -or-
5/8 - 11 (UNC) GRD 8
(OR EQUAL)

TORQUE TO 212 ft./lb. (287 N-m)

DO NOT WELD TO CHASSIS
3.75 in. (95.3mm)

FIXED MOUNT

MOUNTING/LOADING INFORMATION (CONTINUED)

The front spring mounts must be configured as shown below in located in 1 of the 3 options shown below. The single side shift mount must be located in one of the available two open slots.

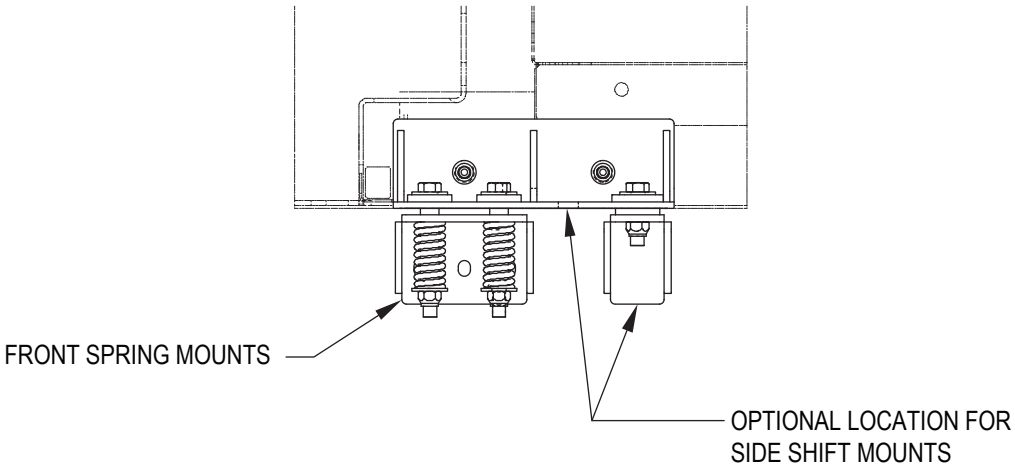

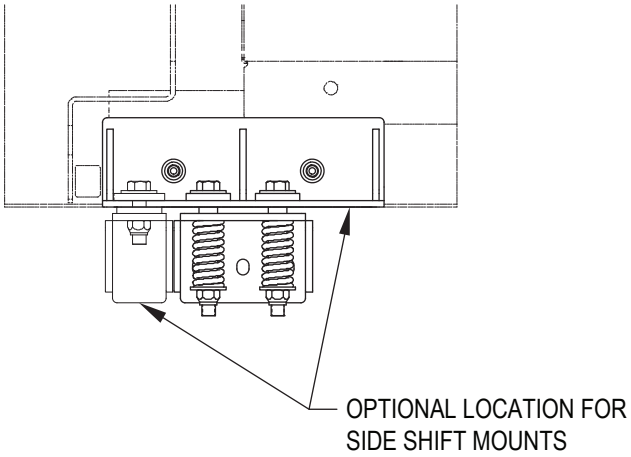

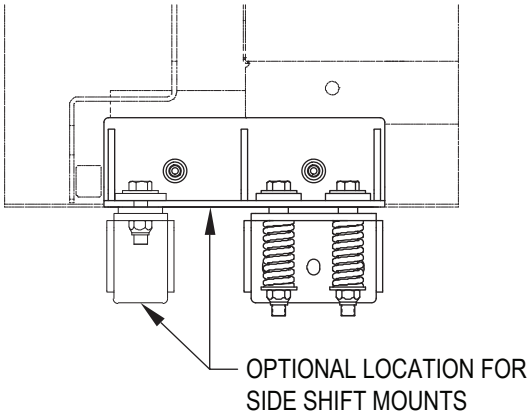

MOUNTING/LOADING INFORMATION (CONTINUED)

The installation kit components are shown in the illustration and listed below. Part and kit numbers/quantities can be found in the parts manual section of this manual. This section is for reference to the components.

Ref. No.	Description	Ref. No.	Description
1	3/4-16 Prevailing Torque Hex Nut*	7	3/4-16 UNF x 7.5 Hex Cap Screw *
2	Mount Compression Spring	8	Mount Stop Bracket Assembly
3	Spring Spacer Tube	9	3/4-16 UNF x 3.5 Hex Cap Screw *
4	Lower Mount Bracket Assembly	10	Upper Mount
5	Square Washer	11	Rear Hard Mount
6	3/4 in. Type A Plain Washer, Wide *		
Hardware used for mounting brackets to MBH6 frame and to chassis.			
12	5/8-18 UNF x 2 Hex Cap Screw *	14	5/8-16 Prevailing Torque Hex Nut*
13	5/8 in. Type A Plain Washer, Wide *		

* *Grade 8 hardware*

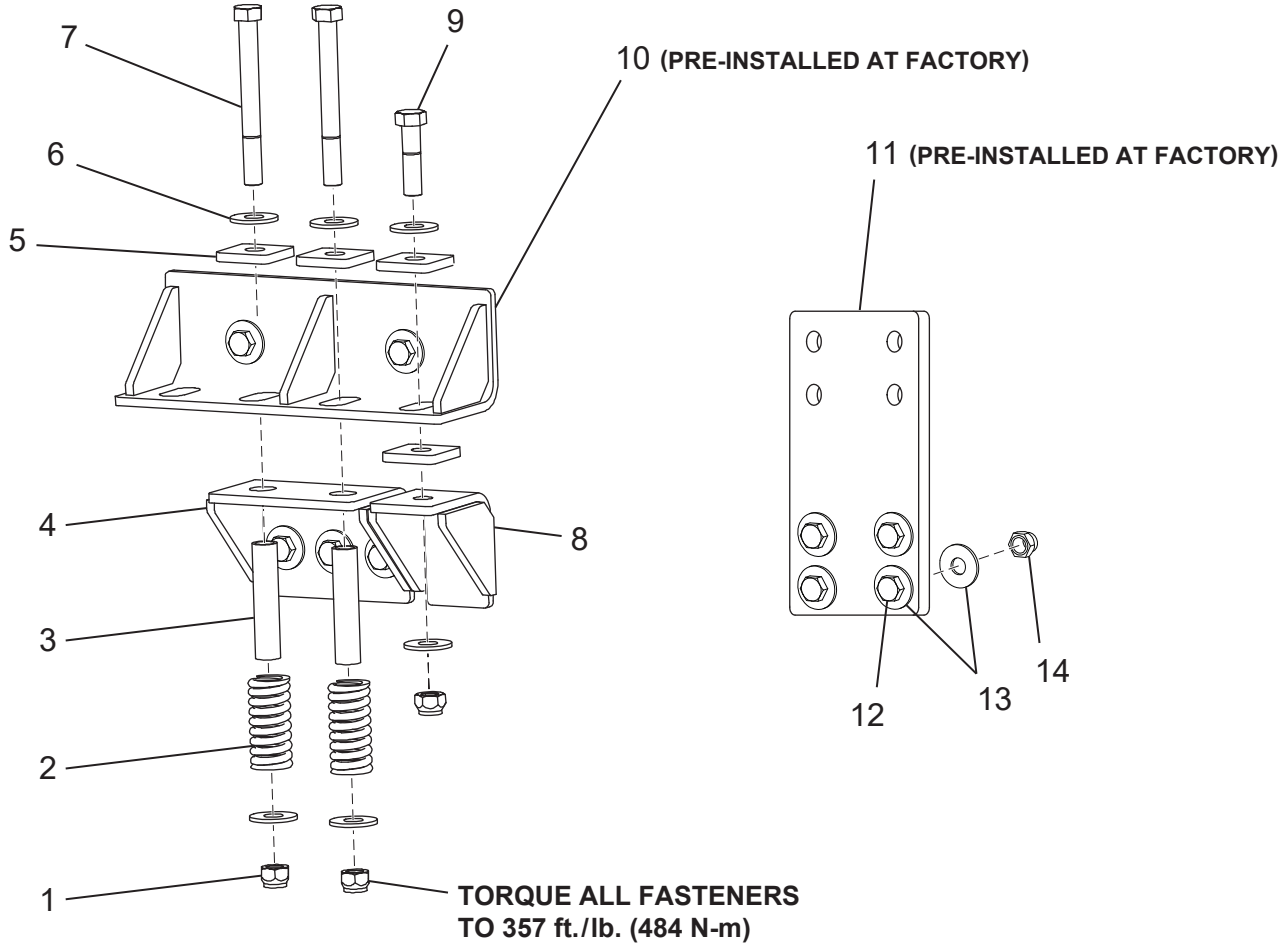

SELECTING A MULCHING MATERIAL

Several factors must be considered when selecting material to convey through the Material Blower. The variety of the wood used, how it is processed, its moisture content, and the presence of foreign objects all affect the ability of the Material Blower to convey the mulch at a uniform rate.

The mulch material must be processed and/or screened so that a minimum amount of material is over 2 in. (5.1 cm) in any direction with no material exceeding 4 in. (10.2 cm) in length. The Material Blower is not a wood processor. It only reduces mulch fibers when they protrude above the airlock vanes. As the vanes rotate past the knives, the protruding fibers are sheared off. If the mulch contains long or large fibers, and/ or if the wood fibers are harder to cut, then the machine's throughput is reduced. For example, if two mulches have the same mix of material sizes that the Material Blower airlock rotor must cut, but one is softwood like pine, and one is hardwood such as oak, the pine would go through at a higher rate because it is easier to cut.

There are many different types of material that can be successfully processed through your Material Blower. These materials are categorized into three main groups. These classifications are important when considering machine performance, material feed rate, and overall operation.

1. Dry Aged Material:	Aged double- and triple-processed bark mulch, saw dust, or wood shavings.
2. Green Material:	Single-process hard wood mulch, green wood, or large chunky material.
3. Wet or Heavy Material:	Wet, heavy bark mulch and compost. Heavy fluid materials such as sand, dirt or gravel.

Most importantly, when selecting a material, consider the greenness of the wood and its moisture content. Wood that is well seasoned is easier to cut than green wood. It also processes better, making a less stringy mulch. High moisture content in the mulch may also cause it to bridge in the hopper, and pack in the airlock vanes and discharge hose which will reduce the overall machine output.

Avoid using mulches that contain any hard foreign objects such as rocks, nails, steel, cans, glass, etc. These objects could cause bodily injury as well as damage to machine components, especially, the cutting knives in the airlock.

PRE-START EQUIPMENT CHECK

⚠ CAUTION ***Equipment check is made with the engine off and all rotating parts stopped. Failure to comply could result in minor or moderate personal injury. Failure to comply could also result in product or property damage.***

Safety check to ensure operator safety:

1. Ensure that all guards are in place.
2. Tool Kit - see that it contains all prescribed items (see Tool Kit list).
3. Lubricate equipment - use hand gun only (see Lubrication Chart).
4. Check engine oil - refer to engine operator's manual.
5. Check liquid coolant level in radiator and overflow tank. (Protected to -34ºF (-37ºC) when shipped.)
6. Inspect the engine air cleaner (refer to the engine operator's manual), the radiator chaff screen, and blower air cleaner for dust and dirt. If necessary, clean or replace the air filters.
7. Check fuel level. Use only Ultra-Low-Sulfur diesel fuel.
8. Check hopper and transition for foreign objects that could injure workers or damage equipment when the machine is started.
9. Ensure that tarp is open and secured in place. Never operate machine with tarp covering hopper.

⚠ CAUTION ***Allowing the tarp to hang or sag over hopper during operation raises the risk that the tarp will be pulled into the equipment. This will cause damage to the unit and could be a risk to the safety of the operator.***

10. Check the fluid level in the hydraulic tank. Proper level is 3/4 in. from the top of the sight gauge. (See Lubrication Chart for oil specification.)
11. Install the discharge hose, using clamps and gaskets provided with the machine.

⚠ CAUTION ***Do not use radiator-type clamps. These clamps may not hold under machine-operating pressure. Failure to comply could result in minor or moderate personal injury. Failure to comply could also result in product or property damage.***

12. Check to verify the radiator is free of mulch and debris obstruction to ensure over heating does not occur.

NOTICE ***Do NOT use high pressure water to clean out radiator fins because damage will occur to the delicate radiator fins.***

CONTROL GUIDE

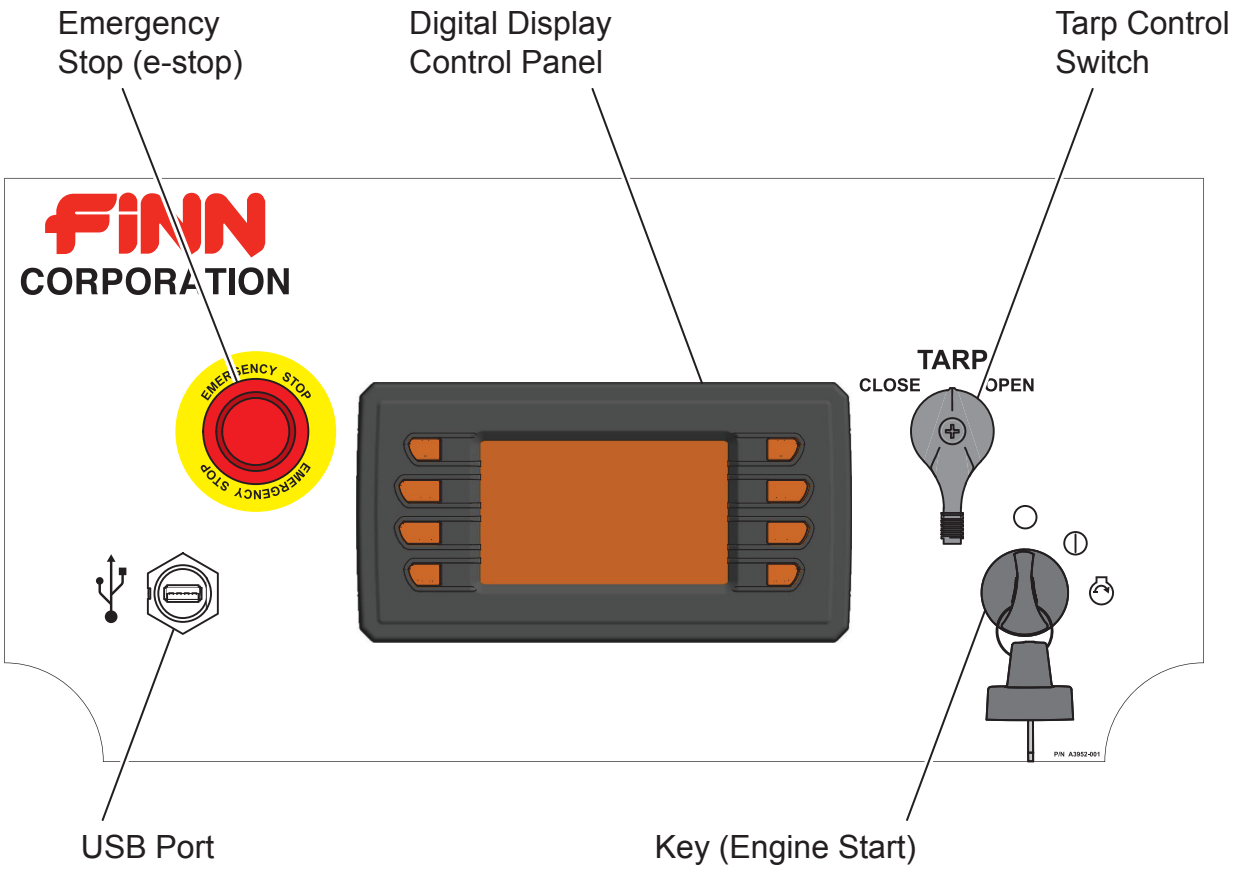

Main Control Panel

CONTROL GUIDE (CONTINUED)

Emergency Stop (e-stop)	The Emergency Stop (E-Stop) is a critical safety component. The button is colored red to be visible and to indicate a "stop" function. The button is made increasingly visible by the bright yellow that surrounds it. The E-Stop will cut all power to the machine when pushed (engaged). E-Stop devices should NEVER be disabled under any circumstances.
Digital Display Control Panel	Control interface for the unit which displays various functions of the unit. The digital display also shows information about the machine.
Tarp Control Switch	A toggle switch used to open and close the tarp on the unit. Make sure the tarp or tarp arms will not come into contact with anything above it before using the tarp control switch.
USB Port	An access point for system and software updates.
Key (Engine Start)	Ignition switch which turns on the unit for operation. It has three settings: an OFF position, a RUN position (which will activate the electronics of the unit without starting the unit), and a START position to activate the engine.

	OFF Symbol Key switch is in the OFF position cutting power from the unit.		**RUN Symbol** Key switch is in the RUN position while in operation.		**START Symbol** The key switch is turned to the START position to start the unit.

Ignition Switch Symbols

Top View

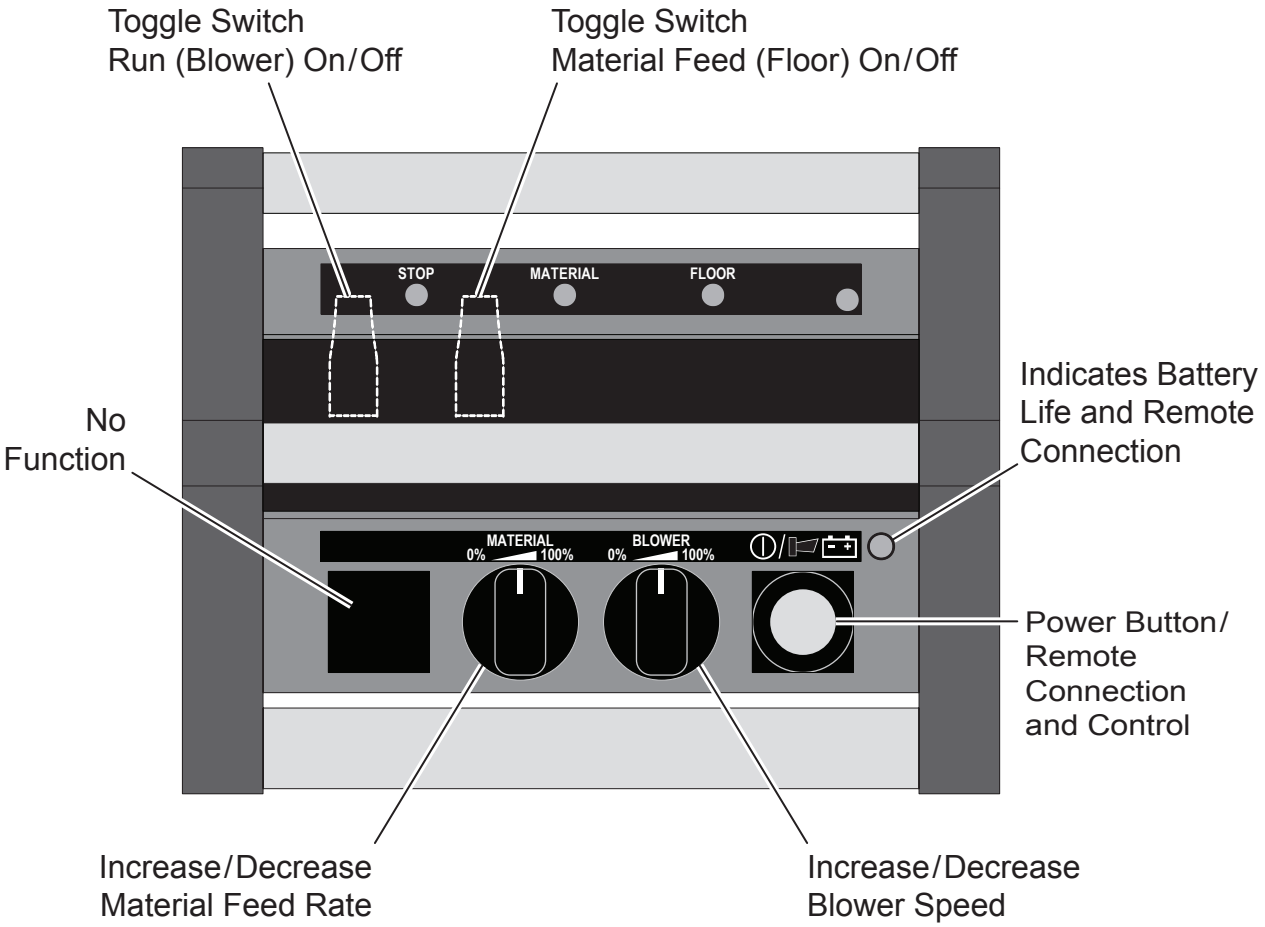

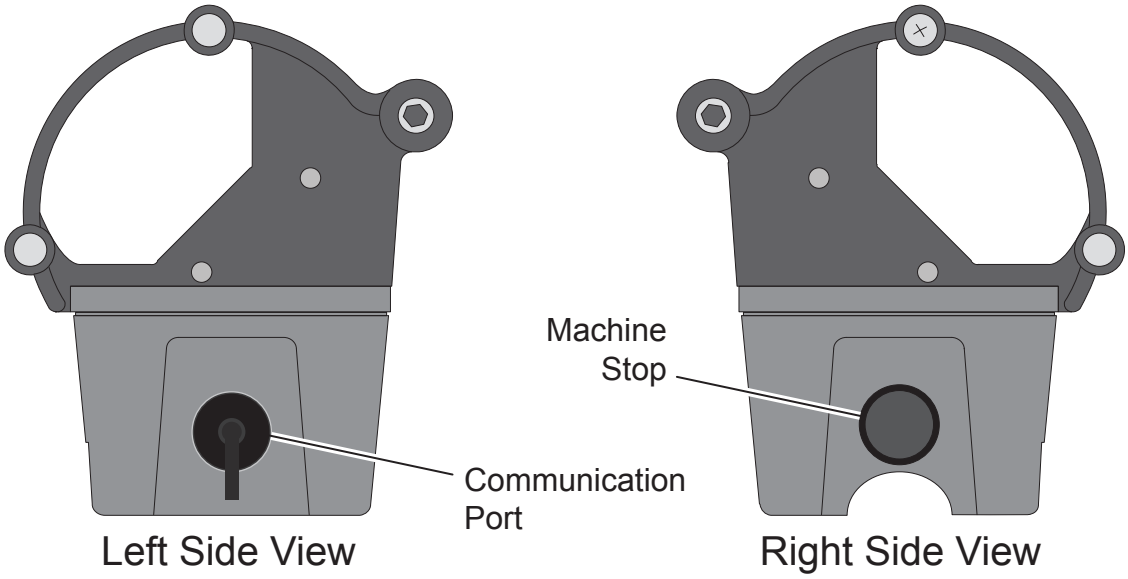

Radio Remote Transmitter

CONTROL GUIDE (CONTINUED)

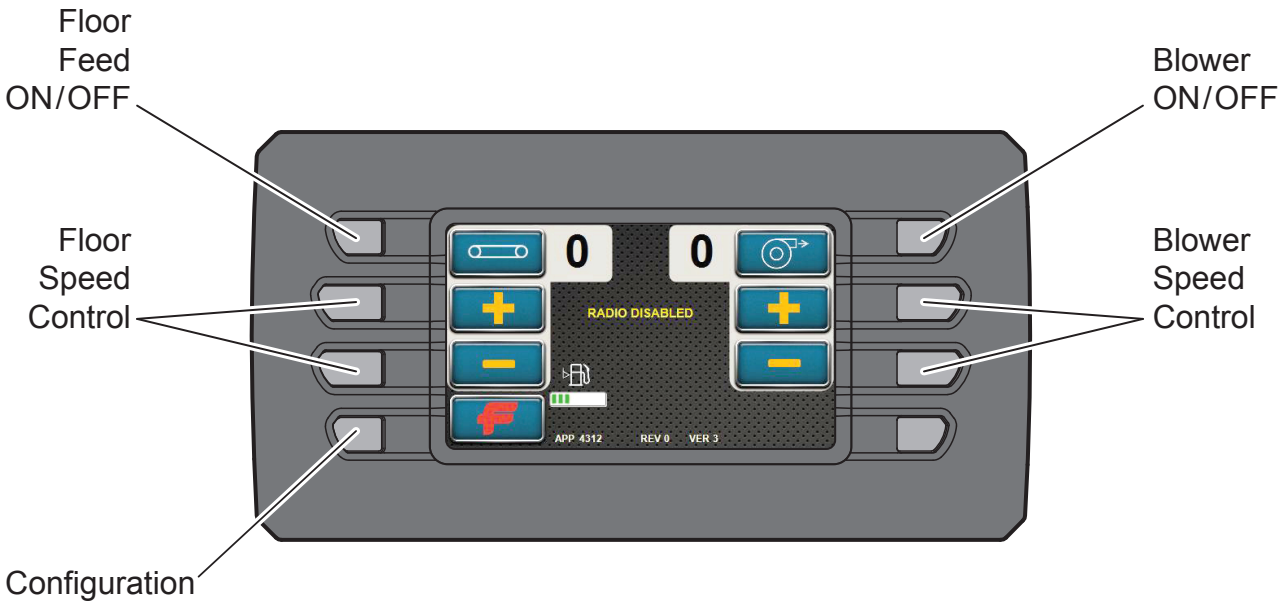

COMMONLY USED ICONS

FLOOR Button
Turns on the floor system, moving material toward blower [on (green)].

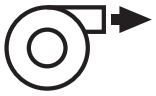

BLOWER Button
Turns on the blower [on (green)] and increases the engine speed to high idle.

ADD Button
Used to increase a setting.

MINUS Button
Used to decrease a setting.

CONFIGURATION Button
Switches the screen to the other options screens.

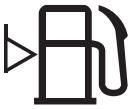

FUEL LEVEL Icon
This meter indicate the fuel level in the unit; it does not indicate the fuel level of the truck the unit is attached.

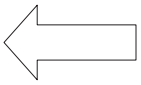

LEFT ARROW Button
Used to go up to the next or previous screen option.

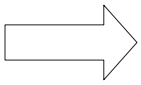

RIGHT ARROW Button
Used to go up to the next or previous screen option.

BACK Button
Returns to the previous screen (without saving).

BACK and SAVE Button
Saves the changes made and returns to the previous screen.

BLOWER COMPONENT

BLOWER COMPONENT OVERVIEW

Please examine the blower for any damage, and if any damage is found, report it immediately to Finn Corporation. The blower component used on the Finn Material Blower is built to exacting standards and, if properly maintained, will provide many years of reliable service. Read and follow every step of these instructions when maintaining the blower.

NOTE: Record the blower model and serial numbers in this instruction manual. Use this identification on any replacement part orders, or if service or application assistance is required.

BLOWER COMPONENT OPERATING LIMITS

MAX RPM	MAX PRESSURE DIFFERENTIAL	MAX VACUUM	MAX TEMPERATURE RISE	MAWP
2,350	14 psi (965 mbar)	16 inch-Hg (542 mbar)	240°F (133°C)	15 psi (1,034 bar)
Maximum conditions based upon 70°F (21°C) inlet temperature and 14.7 psi (1 bar) absolute inlet pressure.				

To permit continued satisfactory performance, a blower must be operated within certain approved limiting conditions. The manufacturer's warranty is, of course, also contingent on such operation.

⚠ WARNING ***The maximum pressure differential is based on the difference between the inlet pressure and the outlet pressure. The maximum pressure differential shall not be exceeded. Exceeding the maximum pressure differential will cause serious damage to the equipment and could cause bodily injury.***

⚠ WARNING ***The maximum allowable working pressure (MAWP) is based on the absolute pressure of the blower housing and is NOT the maximum allowable pressure differential. Exceeding the MAWP will cause serious damage to the equipment and could cause bodily injury.***

NOTICE ***Special attention must be paid when a blower has a higher than standard ambient suction temperature. Special recommendations for operating parameters and/or additional cooling may be recommended. Consult the factory or local representative for appropriate information.***

BLOWER COMPONENT INFORMATION

This blower system is a rotary lobe blower providing positive displacement. The pumping capacity is determined by size, operating speed, and differential pressure conditions. Blowers employ rotors rotating in opposite directions within a housing closed at the ends by end plates.

Internal lubrication is not needed, as there is no moving contact. Clearances between the rotors during rotation are maintained by a pair of accurately machined helical timing gears, mounted on the two shafts extended outside the air chamber. The intermeshing rotary lobes are designed to rotate and trap air between each rotor and the housing. As the rotor lobes rotate past the edge of the suction port, the trapped air is essentially at suction pressure and temperature. Since the blower is a constant volume device, the trapped air remains at suction pressure until the leading rotor lobe opens into the discharge port. The close clearances between the rotors inhibit back slippage of the trapped volume from between the rotors, and the trapped volume is forced into the discharge piping. Compression occurs not internal to the blower but by the amount of restriction, either downstream of the blower discharge port or upstream of the blower inlet port.

BLOWER COMPONENT (CONTINUED)

BLOWER COMPONENT INFORMATION (CONTINUED)

In addition, the machine can operate in either direction. Never attempt to control capacity by means of a throttle valve in the intake or discharge piping. This will increase the power load on the drive system, will increase operating temperatures, and can overload and/or seriously damage the blower.

⚠ WARNING ***The blower must be handled using an appropriate device such as a fork truck or appropriate lifting device when removed from the Finn Material Blower. See the table for approximate weights. Care should be taken to assure blower does not over-turn during handling, removal, service and installation.***

BLOWER COMPONENT LUBRICATION SPECIFICATIONS

APPROXIMATE OIL CAPACITY		APPROXIMATE WEIGHT
GEAR END	DRIVE END	
16.9 oz (500 mL)	16.9 oz (500 mL)	310 lb (141 kg)

Oil capacities are based on filling from dry condition. Less oil may be needed depending on emptiness of oil reservoir(s) after draining. Always fill the gear housing until oil drips out of the oil level hole. Replace plugs in their respective holes. Following this procedure will ensure proper oil level.

Refer to blower manual for more information.

BLOWER COMPONENT LUBRICATION

Every blower system is factory-tested, oil-drained, and shipped dry to Finn Corporation. Both independent oil reservoirs are filled at Finn Corporation to the proper level before operation.

Shaft bearings at the gear end of the blower are splash-lubricated by one or both gears dipping into an oil reservoir formed in the gear end plate and cover. Shaft bearings at the drive end of the blower are lubricated by a slinger assembly dipping into an oil reservoir. Before starting the Material Blower, check the oil sumps as described in the Blower Component Filling Procedure.

Add oil to the blower in the capacity quantity listed in the table. Make sure oil level is maintained within the notched area of the sight glass. Lower drive blowers have “bull’s eye” type oil level gauges. Maintain oil levels at the center of the glass.

⚠ WARNING ***Never attempt to change or add lubrication while the Material Blower is running. Failure to heed this warning could result in damage to the equipment or personal injury. Oil must be checked when the unit is NOT running.***

⚠ WARNING ***Properly dispose of the spent lubricants. Refer to the manufacturer of the lubricant and any regulations to assure proper, safe disposal.***

⚠ WARNING ***Do not start the Material Blower until you are sure oil has been put in the gear housing and rear cover. Operation of the unit without proper lubrication will cause the blower to fail and void the warranty.***

BLOWER COMPONENT (CONTINUED)

BLOWER LUBRICATION FILLING PROCEDURE

See Recommended Lubricants Chart for suggested lubricants and grease.

1. Remove the fill plugs or breathers from both gear end and drive end plates.
2. Slowly pour oil through the fill until oil appears in the oil sight glass. Bring the oil level to the center of the sight glass.
3. Verify oil level is at proper level in both gear end and drive end sight glasses.
4. Replace the fill plugs or breathers that were removed in step 1.

CONTROL PANEL GUIDE AND SYSTEM OPERATION

The control panel has eight navigation buttons which are configured for use to properly operate and maintain the unit. Please read this entire section before starting the unit. This section will cover proper use of the control panel while the unit is running and the information should be familiar before starting the unit.

STARTING PROCEDURE

⚠ CAUTION ***See safety section of the manual before operating the unit. Failure to comply could result in minor or moderate personal injury. Failure to comply could also result in product or property damage.***

Turn key clockwise to the **RUN** position and wait for control pad to illuminate and go through its start-up procedure.

MENU NAVIGATION

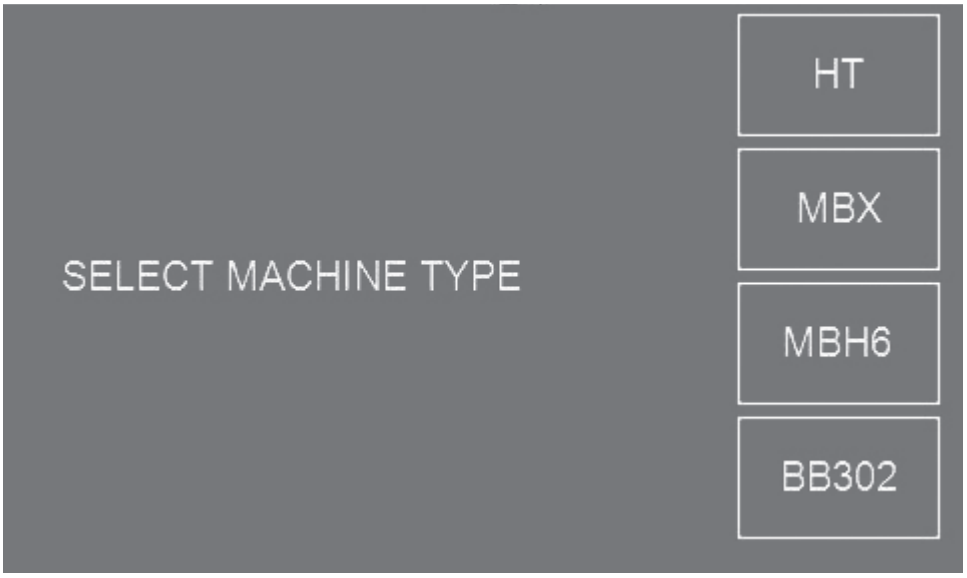

The eight system softkeys are used to navigate between displays, select menu items and change data. Pressing any of the navigation softkeys will display the softkey menu that is associated with each softkey.

Your unit should display the normal Home/Engine Off screen at the beginning, but should the screen shown here appear, press the softkey labelled MBH6 to return the unit to valid operation.

START UP DISPLAY

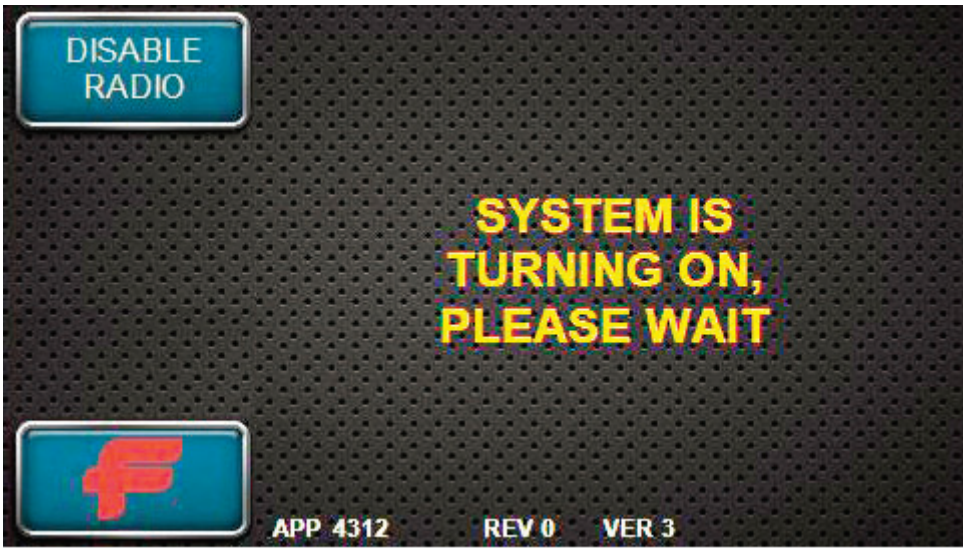

The normal Home/ Engine Off screen display should appear at the touch of the softkey. This screen allows you to see the status of the machine BEFORE the unit is turned on. At this point in startup, the radio remote will be OFF and the controller will be OFFLINE.

START UP DISPLAY (CONTINUED)

If the controller remains OFFLINE, a fault code will be generated and the "FC" icon will appear next to the fuel gauge and flash repeatedly. See the Fault Code section of the manual to address Fault Codes. This screen shows the fuel level of the unit.

Under normal conditions, the controller should come ONLINE after five (5) seconds. There should be no Fault Codes. The display will still indicate that the radio remote is still turned off. At this point, the controller is awaiting a decision from the operator on whether or not the radio remote will be used during operation.

If machine interlock errors are present for the unit, they will appear after the controller is ONLINE. The screen shown here illustrates that there are multiple Emergency Stop (E-Stop) buttons that have been pushed. It also shows that a door on the unit is open or not completely closed. Before the engine can be started, the E-Stops must be released and the door must be closed completely.

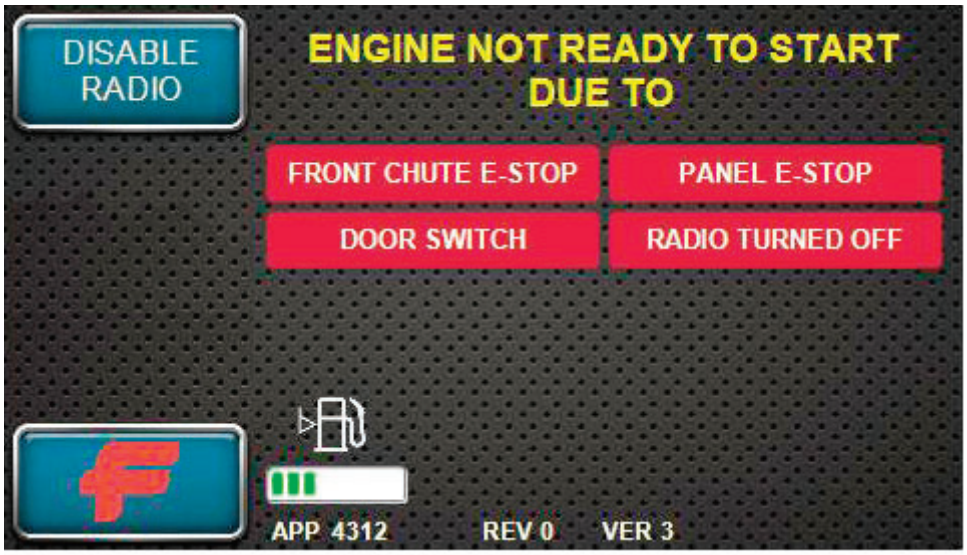

RUNNING UNIT WITHOUT RADIO REMOTE

With the Fault Code(s) cleared and door(s) closed, the decision to run the unit without the radio remote is now an option.

Press the DISABLE RADIO softkey at this time and the screen will change to the screen shown.

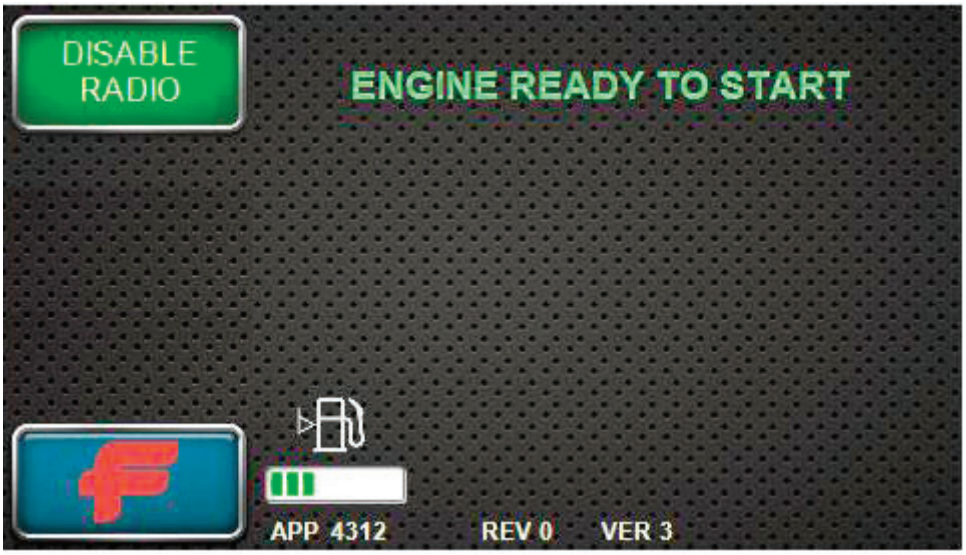

RUNNING UNIT WITHOUT RADIO REMOTE (CONTINUED)

Turn the ignition key clockwise to the **START** position. Once the engine starts, the key will return to **RUN** position during operation. This screen will appear on the display and the unit is now ready for operational commands.

Pressing the **BLOWER** softkey or the **FLOOR** softkey on the control panel will put the system in LOCAL MODE. At this point, FLOOR and BLOWER commands from the control panel will be accepted and the radio remote will be locked out from control.

To use the radio remote, both the floor and the blower will need to be turned off. Refer to the Running Unit with Radio Remote section for more information.

RUNNING UNIT WITH RADIO REMOTE

See Opening Display section of the Control Panel Guide. If any Fault Code(s) appear, clear them and close and open door(s) on the unit. At this point in the initial startup, the decision to run the unit with the radio remote is an option.

Turn the radio remote on.

Turn the ignition key clockwise to the **START** position. The key will return to **RUN** position during operation once released.

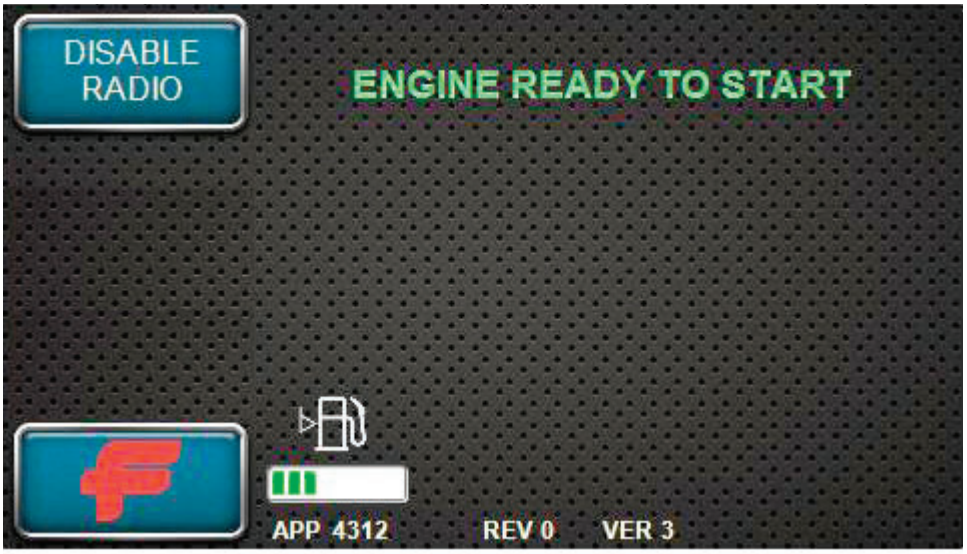

This screen will appear on the display. Press the power button again on radio remote to enable radio remote functionality.

RUNNING UNIT WITH RADIO REMOTE

The unit is now ready for operational commands from the radio remote.

ON THE RADIO REMOTE, press the **RUN** toggle switch before the **MATERIAL FEED** toggle switch on the radio remote to put the system in RADIO MODE. At this point, RUN (BLOWER) and MATERIAL FEED (FLOOR) commands from the radio remote will be accepted and FLOOR and BLOWER commands from the control panel will be locked out.

To return to control panel use, both the floor and the blower will need to be turned off and the radio remote will need to be powered off.

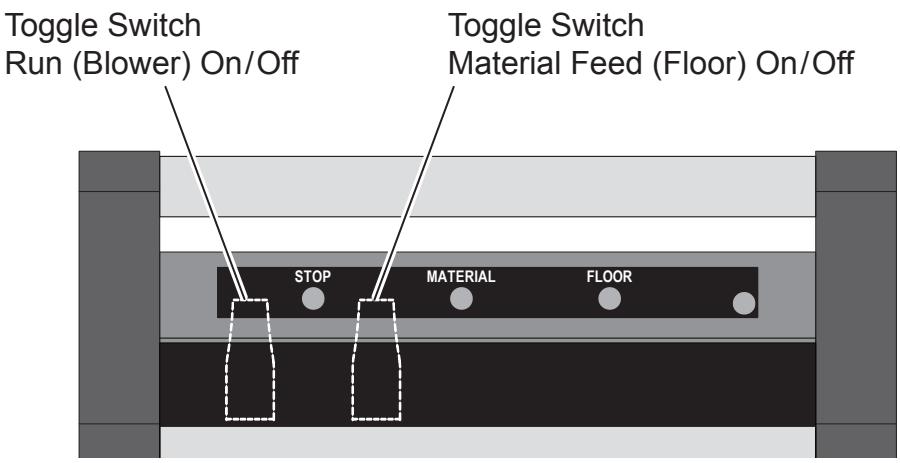

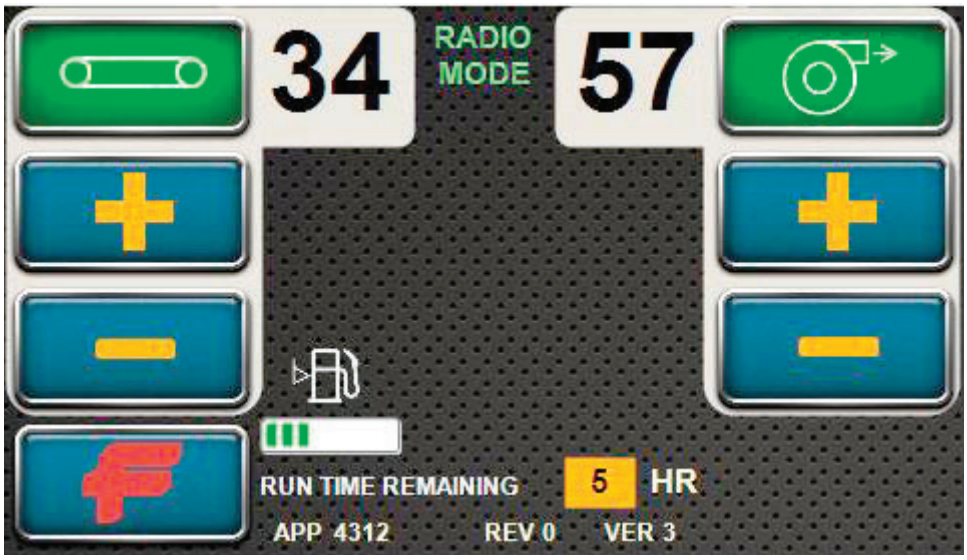

OPTIONS SCREEN

The options screen can be entered by pressing the FINN (**F**) softkey. It is the only functional softkey when the unit is in RADIO MODE. Pressing the **F** softkey will take you to the Options Menu.

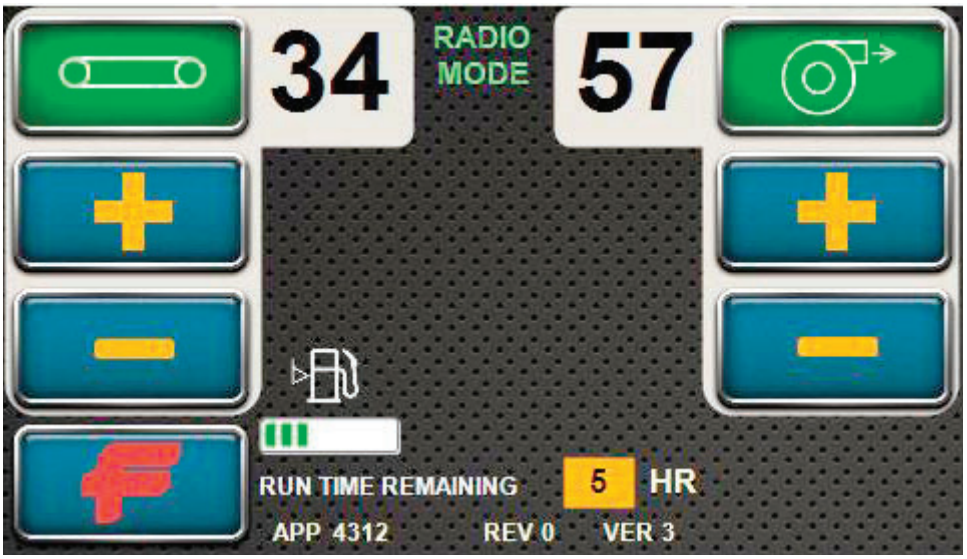

The Options Menu is shown here. This menu allows you to activate certain features of the unit.

A feature at this screen include the Auto-Rev. Press and hold AUTO-REV softkey while blower is on to cycle airlock reverse/forward until softkey is released. The “Material” indicator light on the handheld radio remote flashes green during Auto-Rev Mode.

On this screen is an arrow symbol pointing to the right. This softkey will take the operator to additional options for the operation of the unit (which will be covered later in this section).

The bottom left softkey is the BACK command. This will take the operator back to the previous screen.

The last softkey that appears on this screen is DUST SUPPRESS. This is the Dust Suppression System of the unit.

OPTIONS SCREEN - DUST SUPPRESSION

Pressing the DUST SUPPRESS softkey turns on the Dust Suppression System. This feature can be activated before pressing the **FLOOR** softkey or the **BLOWER** softkey on the control panel.

Make sure all E-Stops are released before attempting to activate the Dust Suppression System. The Dust Suppression System will not activate if any of the E-Stops on the unit are activated.

The Dust Suppression System will activate when the floor is moving forward.

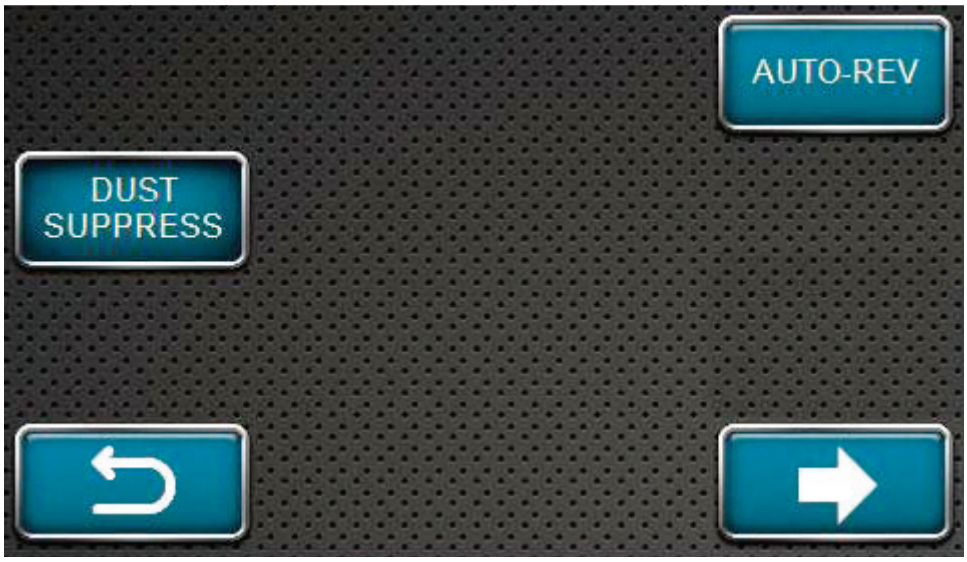

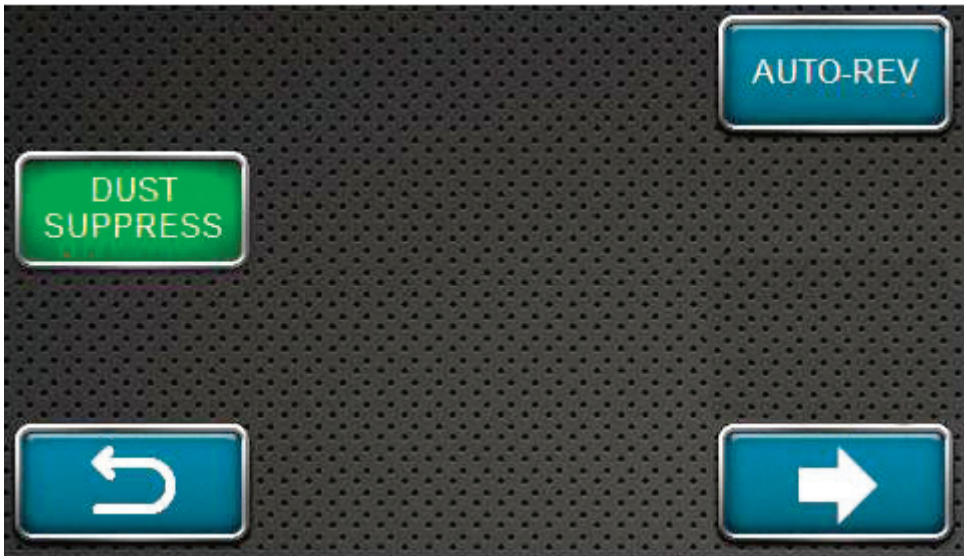

A water icon will appear on the home screen when the Dust Suppression System is activated.

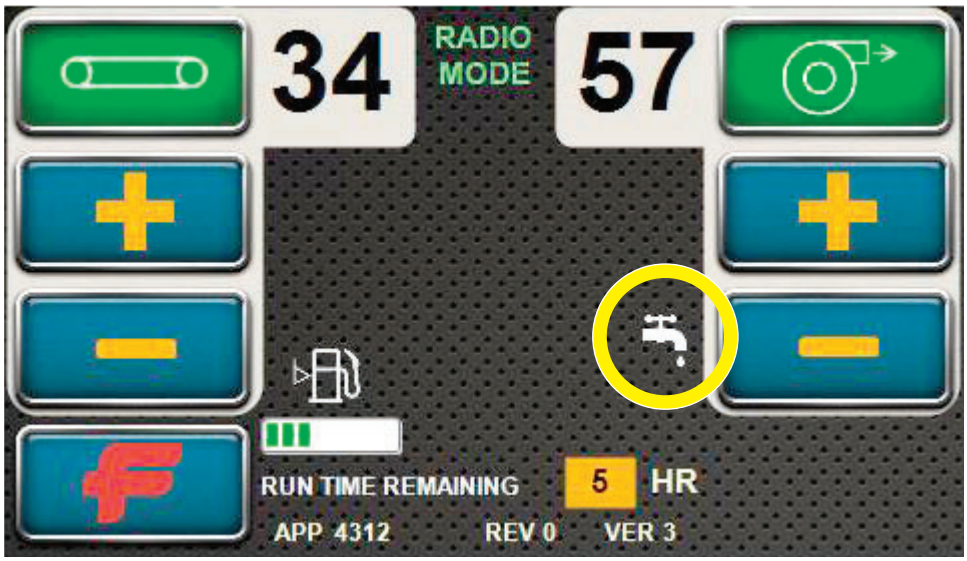

OPTIONS SCREEN - SETTINGS

From the options screen, press the right arrow softkey to switch to more options.

The screen shown here is another set of options available on the unit. To enter the settings of the Material Blower, press the SETTINGS softkey.

Pressing the SETTINGS softkey will open up this screen. The Material Blower is set for Imperial units of measurement by default, but pressing the UNITS softkey will switch the unit to metric measurements.

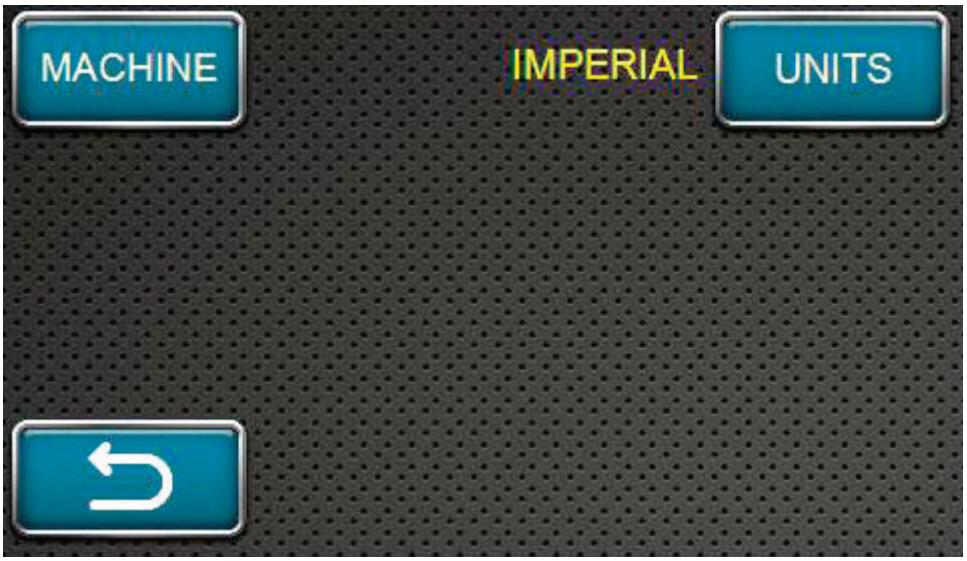

OPTIONS SCREEN - SETTINGS (CONTINUED)

Press the MACHINE softkey to enter the machine settings.

Pressing the MACHINE softkey will open up this screen.

Press the BLOWER softkey to enter the settings screen for the blower.

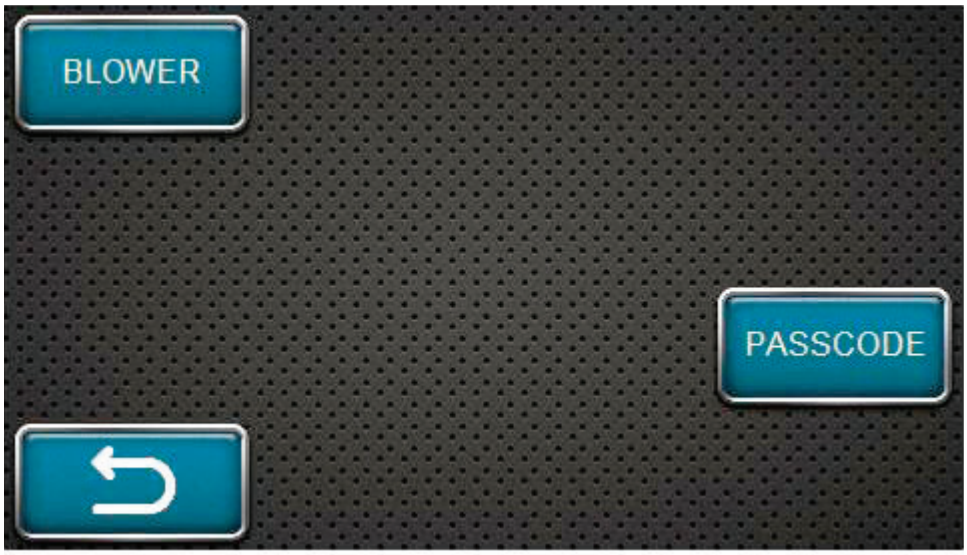

The blower settings screen allows the operator to adjust the blower turn-off delay. The delay is factory-set for five (5) seconds.

Using the plus/increase and minus/decrease softkeys, the delay can be adjusted to the length of time desired.

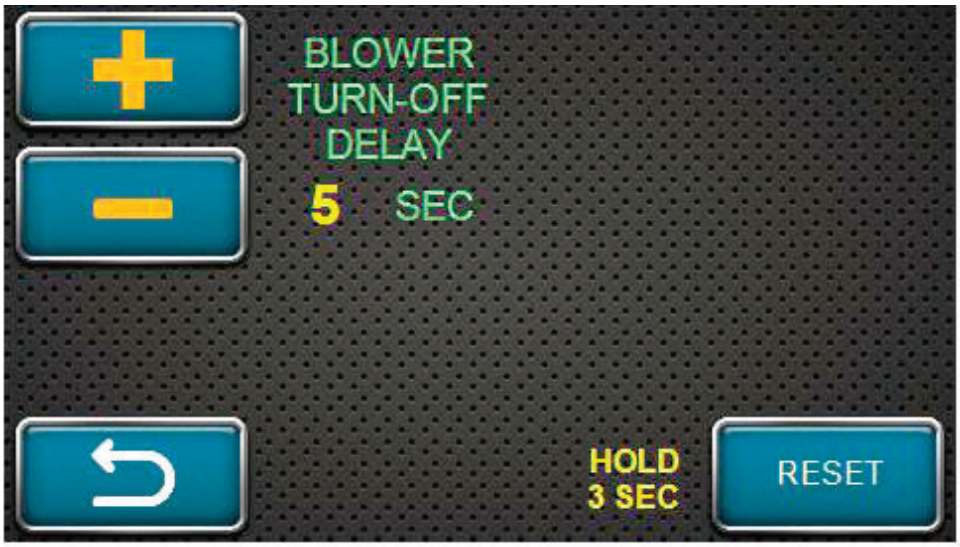

If the operator would like to return the blower turn-off delay to factory settings, press and hold the RESET softkey shown on this screen for three (3) seconds. The turn-off delay will return to the factory-set time of five (5) seconds.

OPTIONS SCREEN - SETTINGS (CONTINUED)

Press the BACK softkey to return to the MACHINE settings screen shown here.

Press the PASSCODE softkey to enter the passcode screen.

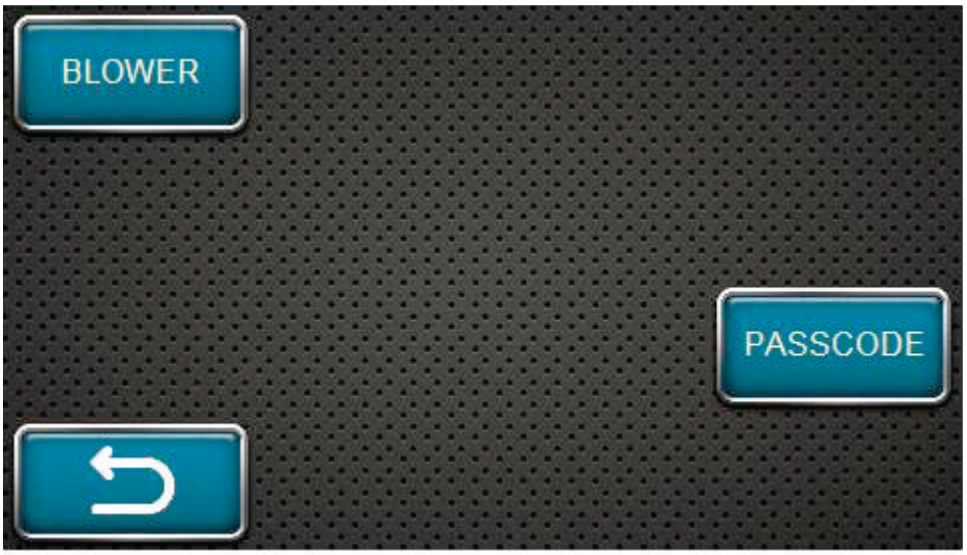

Enter the passcode to continue further in this options screen. The number inside the box is the current number you are working with. Use the left and right arrow softkeys to move left and right. Use the plus/increase and minus/decrease softkeys to change the number. Once the code is entered, press the OK softkey.

To leave this screen, press the BACK softkey.

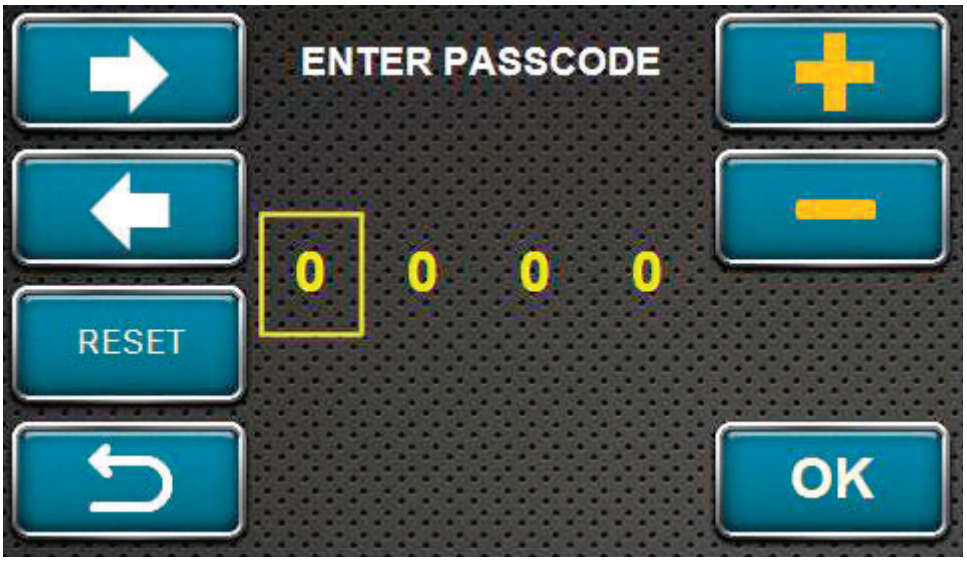

OPTIONS SCREEN - FLOOR SETTINGS

With the correct passcode entered and the OK softkey pressed, this screen will appear on the display. Press the FLOOR softkey to enter the settings for the Material Blower floor settings.

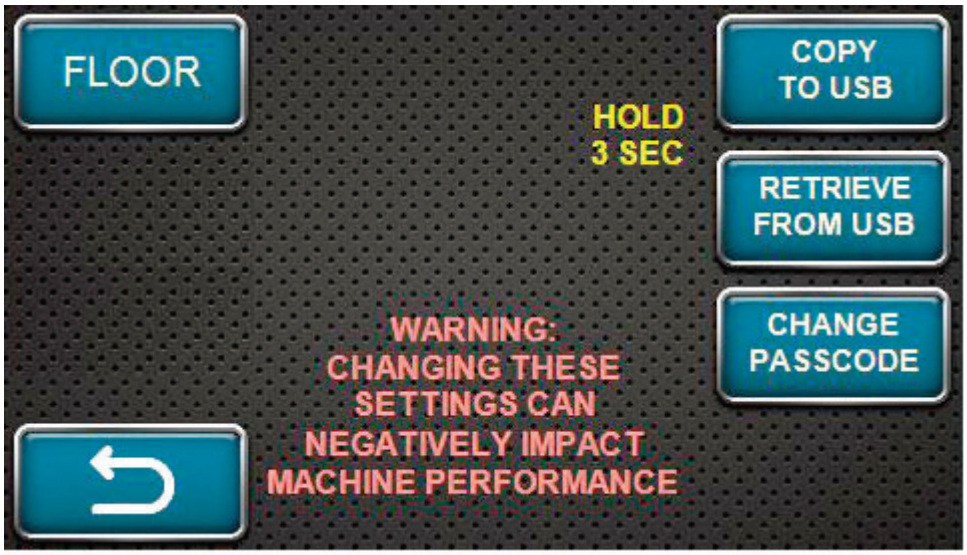

Please note that this screen does warn the operator that changing the settings can have a negative impact on the performance of the Material Blower.

The floor settings screen is shown here.

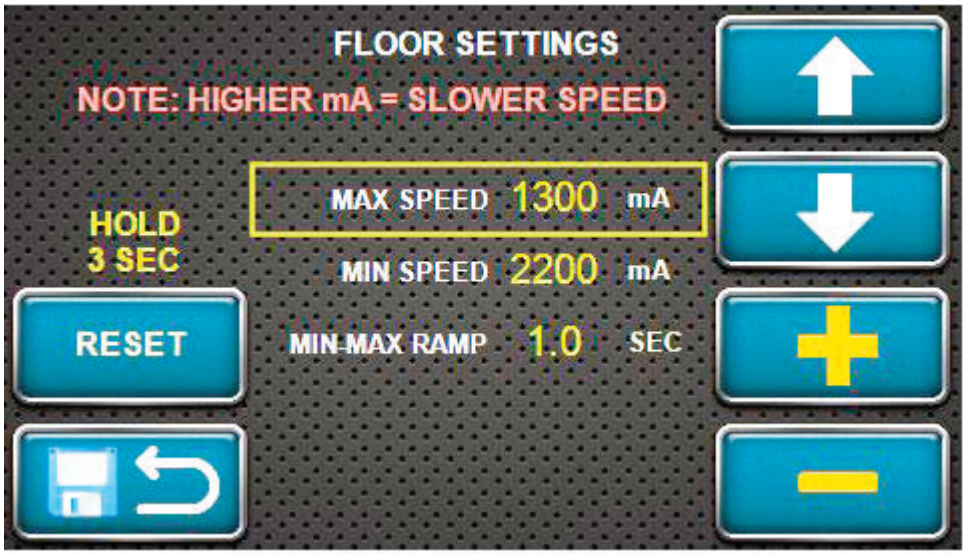

Use the up and down arrow softkeys to highlight the setting the operator wants to adjust. Use the plus/increase and minus/decrease softkeys to change the setting.

Once changed, press the SAVE AND BACK softkey to save the setting and return to the previous screen.

To return the floor settings to factory settings, press and hold the RESET softkey for three (3) seconds. The settings will return to the factory-set defaults. Press the SAVE AND BACK softkey to save the change back to factory settings.

OPTIONS SCREEN - USB

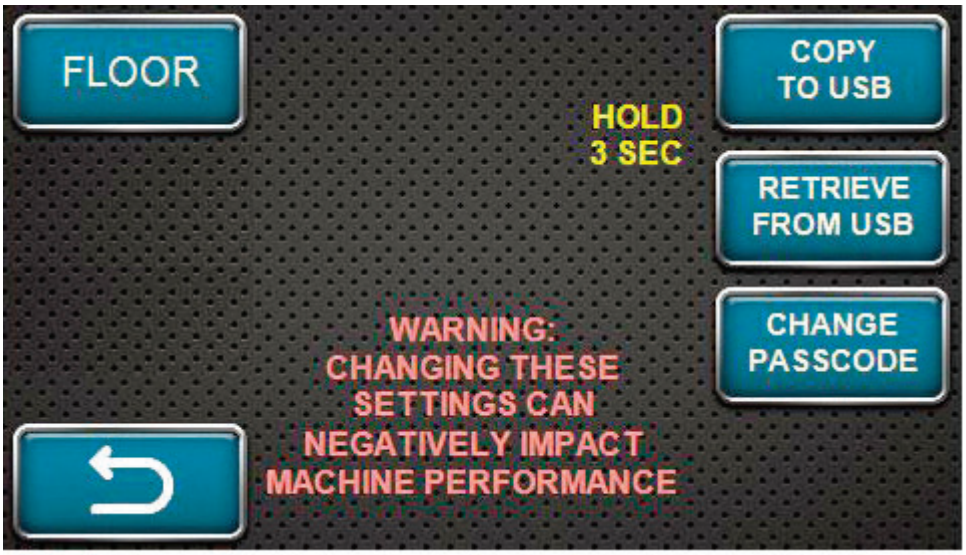

Returning to this screen, there are other options to use.

Located on the main control panel, there is an USB port (as shown in the Control Guide section of this manual).

To use the USB port, insert a USB stick into the port. As instructed by the yellow text on this screen, press and hold the COPY TO USB softkey for three (3) seconds. This will write (save) the current setting values of the Material Blower to the USB stick.

If information is needed from a USB stick, press and hold the RETRIEVE FROM USB softkey for three (3) seconds. This will apply setting values from the USB stick to the various settings saved inside the display.

Yellow text will appear on this screen after each softkey press to inform the operator on status of the copy or retrieval. Typical messages are as follows: “copy successful”, “copy error”, “retrieve successful”, or “retrieve error”.

COPY TO USB will be used before software update; RETRIEVE FROM USB will be used after software update so that original setting values can be restored if they are different from factory defaults.

OPTIONS SCREEN - DIAGNOSTICS

From the first options screen, press the right arrow softkey. Returning to this screen shown here; there are other options available.

Pressing the DIAG softkey takes the operator to the DIAGNOSTICS screen.

The Diagnostics screen is shown here. The options include viewing engine information, listing FINN codes (fault codes) and further controls of the radio remote.

Pressing the ENGINE softkey takes the operator to the Engine Diagnostics screen.

OPTIONS SCREEN - DIAGNOSTICS (CONTINUED)

The Engine Diagnostics screen (shown here) provides the operator with engine fault codes and information that can assist in determining if there is an error in the engine or in a component of the engine.

Pressing the ENGINE CODES softkey will take the operator into one of two screens,

The first screen is a 'no active codes" screen. The left and right softkeys can be pressed to see if any other codes exist, but seeing this screen informs the operator that there are no faults with the engine.

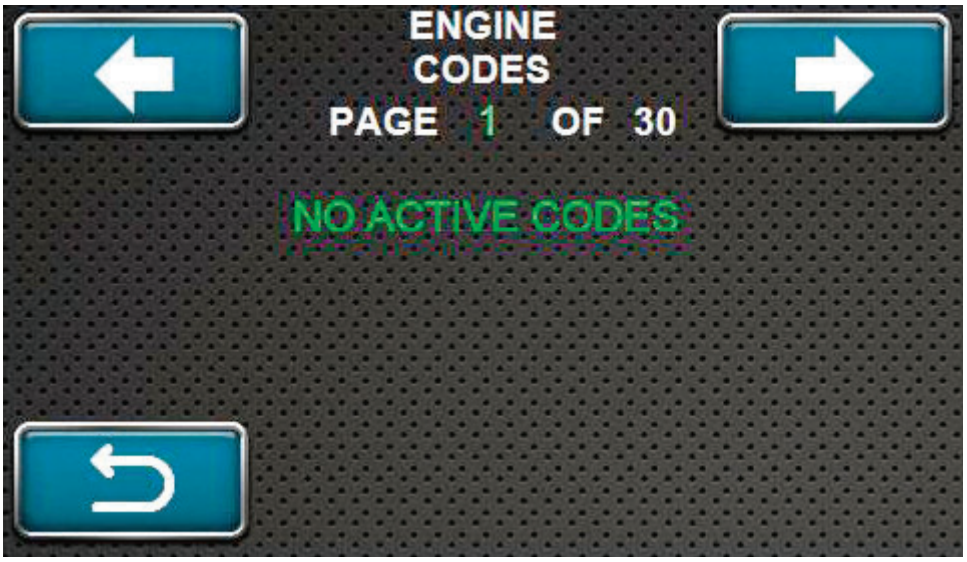

OPTIONS SCREEN - DIAGNOSTICS (CONTINUED)

If there is more information or other codes past the first screen, the left and right arrow icons will flash blue and red.

This screen shows that there is an engine code that needs to be addressed. There is also another code to view since the right arrow icon is flashing red.

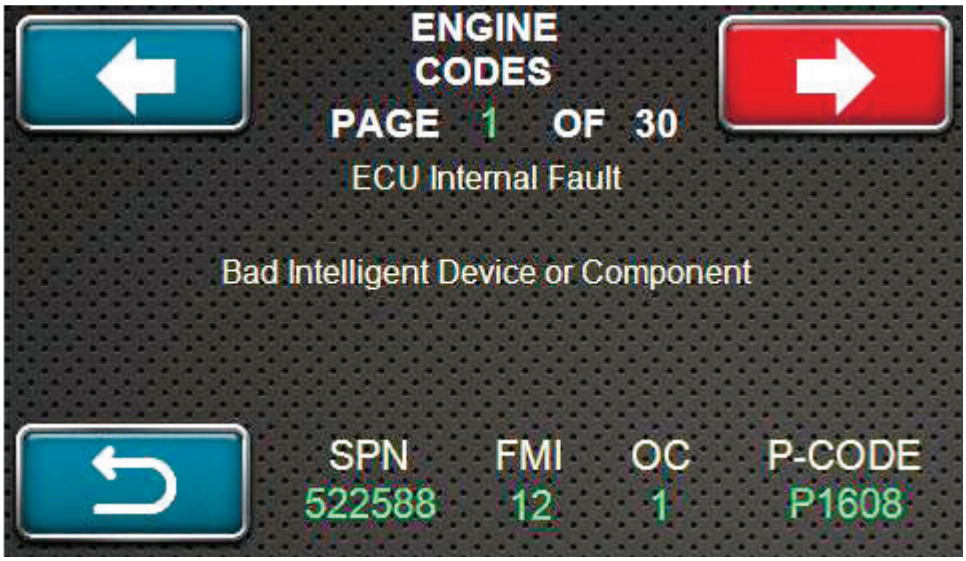

OPTIONS SCREEN - DIAGNOSTICS (CONTINUED)

The Engine Diagnostics screen (shown here) provides the operator with access to the engine data.

This screen appears when the ENGINE DATA softkey is pressed.

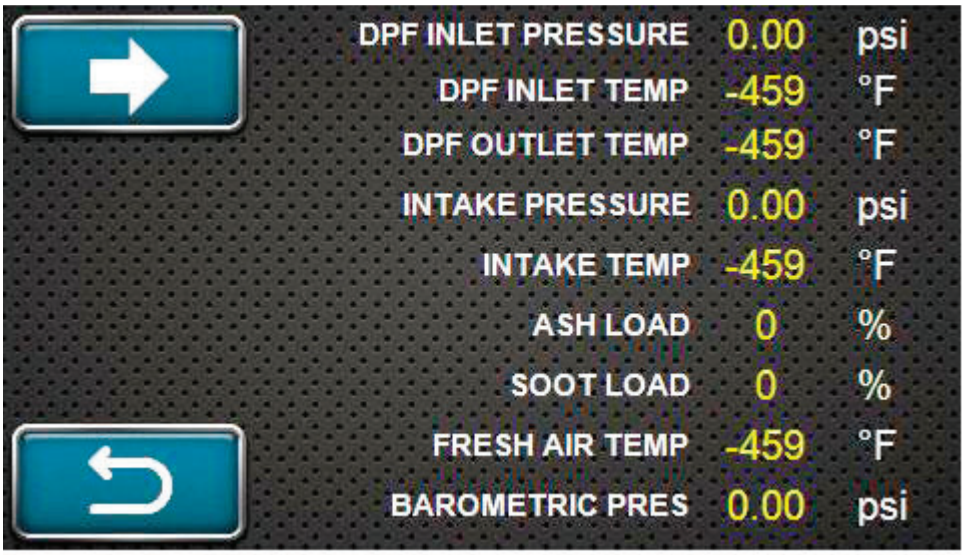

More engine information is available when the arrow softkey is pressed.

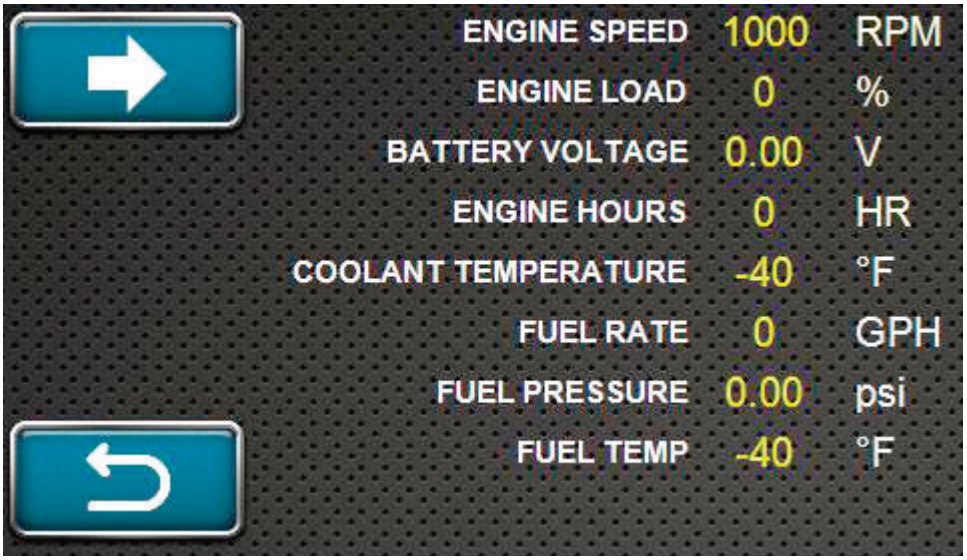

OPTIONS SCREEN - DIAGNOSTICS (CONTINUED)

Return to the Diagnostics main screen (shown here). Press the FINN CODES softkey to view the active codes listed by the unit.

If there is an active code, a screen similar to the one shown here will appear. IF there are additional codes to view, the direction arrows at the top of the screen will flash red and blue. View the additional codes by pressing the arrow softkeys.

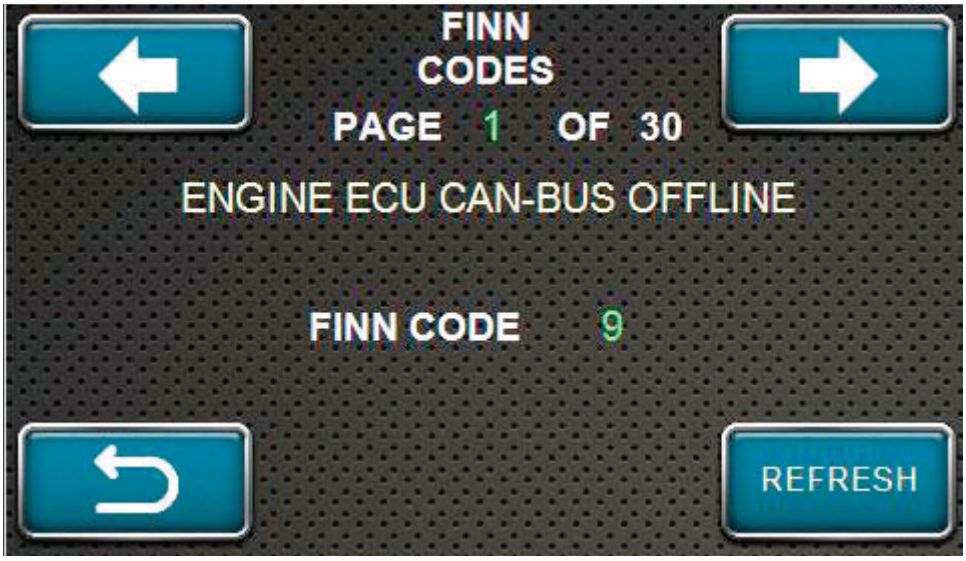

If there are no active Finn Codes, the screen should appear similar to the screen shown here. Also, if the code situations are corrected, the screen should look like this one once the REFRESH softkey is pressed.

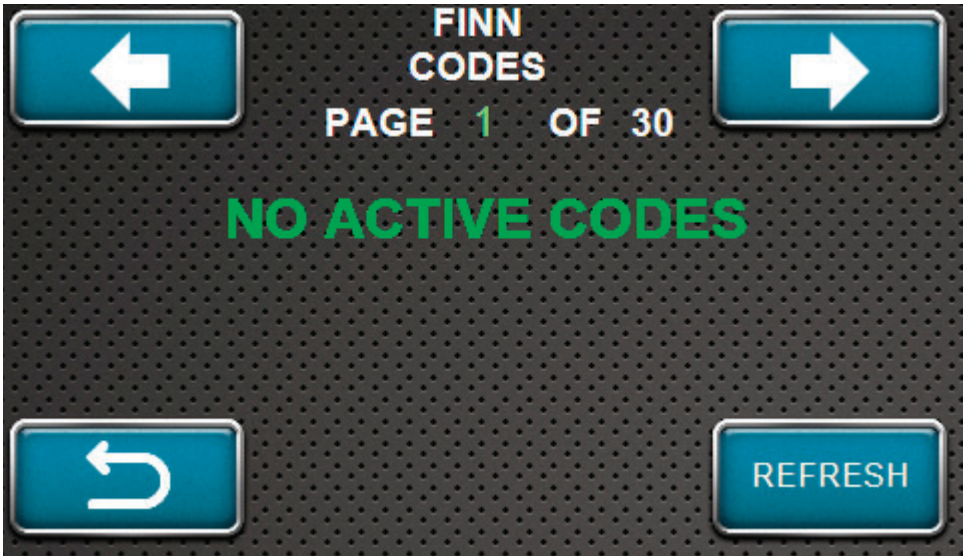

OPTIONS SCREEN - DIAGNOSTICS (CONTINUED)

A list of Finn Codes is shown here.

FINN Code	Problem	Solution
1	E-stop normally closed circuit wire break	Check the normally closed contact block wiring to the e-stops, door switch, and safety relay
4	Panel e-stop normally open circuit shorted to another circuit	Check wiring to the normally open contact block on the panel e-stop
8	Controller is offline	Check the power/ground/CAN-High/CAN-Low wiring to the controller
9	Engine ECU is offline	Check the power/ground/CAN-High/CAN-Low wiring to the engine ECU

OPTIONS SCREEN - RADIO REMOTE DIAGNOSTICS

Return to the Diagnostics main screen (shown here). Press the RADIO softkey to view the radio remote diagnostics screen.

To do this test, the radio remote should be fully charged, the power on the remote should be ON and the remote should be linked to the unit. See the RUNNING UNIT WITH RADIO REMOTE section to activate and link the remote.

This is the radio remote diagnostics screen. Press RADIO TEST to begin a diagnostics test of the remote to ensure all switches and buttons on the remote are functioning correctly.

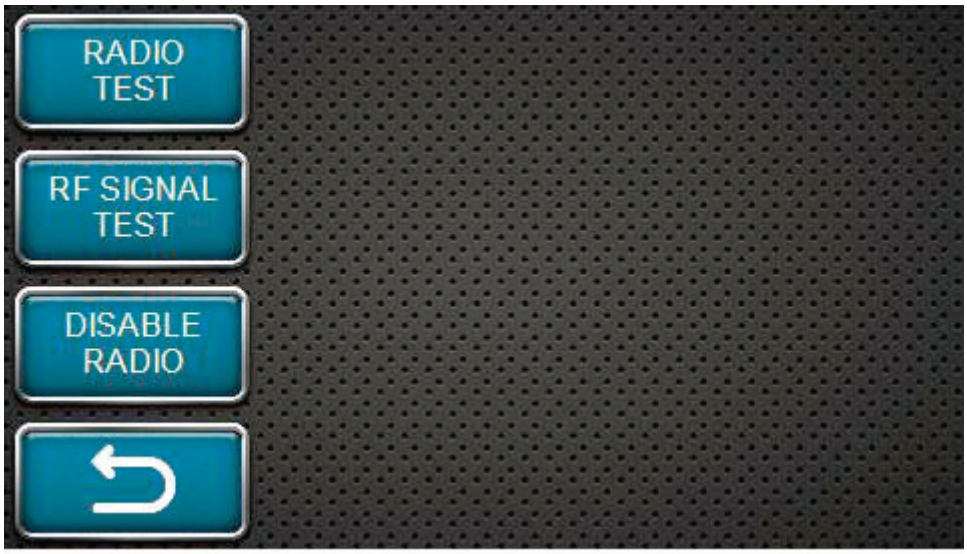

OPTIONS SCREEN - RADIO REMOTE DIAGNOSTICS (CONTINUED)

This screen will appear at the beginning of the test. Move each switch up and down or press each button on the radio remote to send a signal from the remote to the unit.

If the unit received each signal correctly to match each function, the screen shown here should be the final result.

Press the BACK softkey to return to the radio remote diagnostics screen.

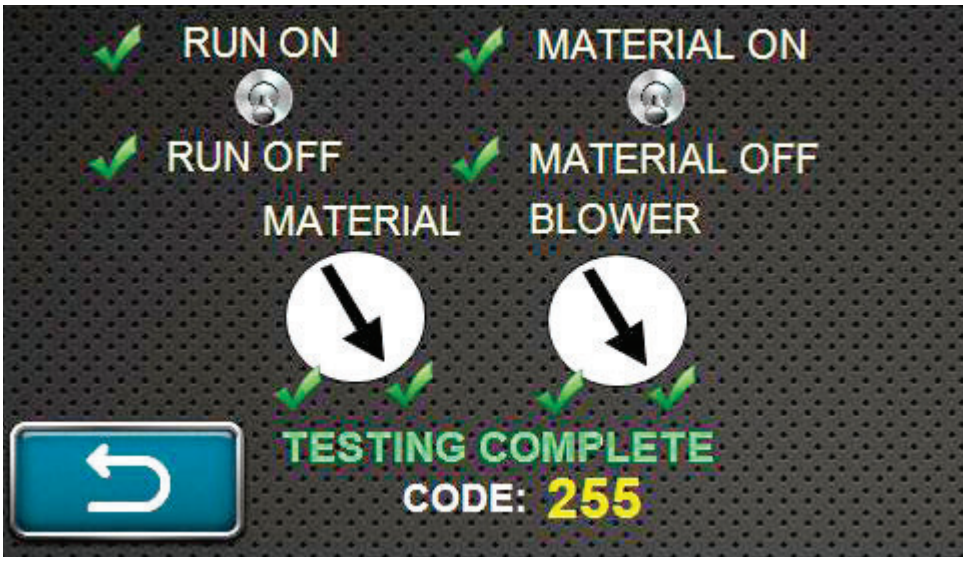

OPTIONS SCREEN - RADIO REMOTE DIAGNOSTICS (CONTINUED)

Return to the radio remote diagnostics screen.

Press RF SIGNAL TEST softkey.

Pressing RF SIGNAL TEST softkey on the control panel will flash the “STOP” indicator light blue on the radio handheld at a constant rate. If rate becomes less consistent, the RF signal quality is dropping.

Use this feature to test RF signal quality when working in an environment that may be prone to RF signal interference.

This feature can be used to help prevent engine shutdowns due to loss of RF signal.

OPTIONS SCREEN - RADIO REMOTE DIAGNOSTICS (CONTINUED)

Return to the radio remote diagnostics screen.

Press DISABLE RADIO softkey.

Pressing DISABLE RADIO softkey on the control panel will hide the RADIO TEST and RF SIGNAL TEST softkey options.

The unit will no longer take commands from the radio remote until the unit is reset.

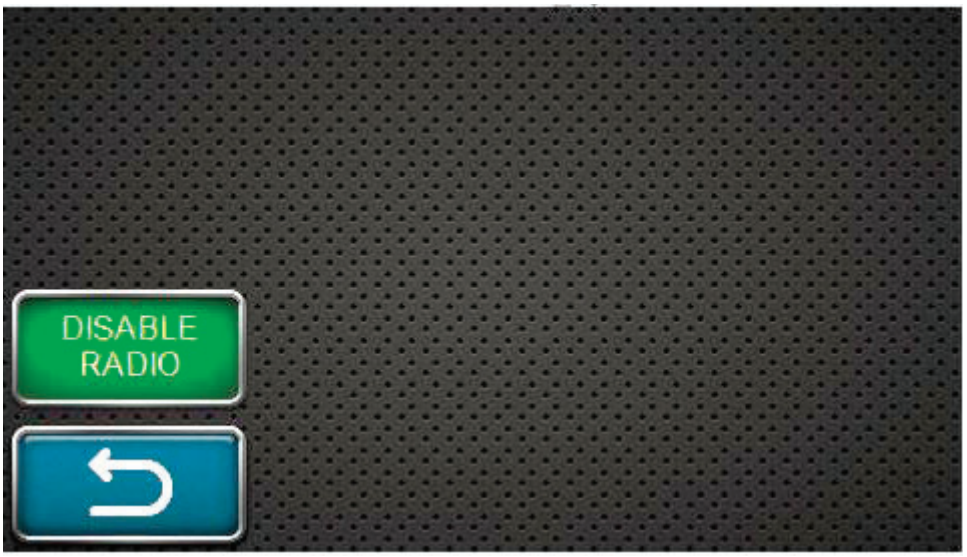

OPTIONS SCREEN - LANGUAGE

Return to the options screen shown here. The screen displays the current language setting in yellow text next to the LANGUAGE softkey. As shown here, the current language setting is for English.

Pressing the LANGUAGE softkey switches the displayed language from English to Spanish.

Press the LANGUAGE softkey again to return the display to English.

OPTIONS SCREEN - ABOUT

Return to the options screen shown here. Press the ABOUT softkey to view more information about the digital interface system.

Shown here, the ABOUT screen shows system information. The RESET HOURS softkey option will set the “resettable hours” value to zero; this is an hour counter for end user use and not engine run hours.

OPTIONS SCREEN - REGENERATION

REGENERATION EXPLAINED

See Engine Owner's Manual for information on the Diesel Particulate Filter (DPF).

Particulate Matter (PM) in the engine exhaust accumulates in the Soot Filter (SF) within the DPF causing it to clog, reducing engine performance. Therefore, it is necessary to burn off the accumulated PM. This process is referred to as Regeneration. The Engine Control Unit (ECU) uses components such as the DPF differential pressure sensor, temperature sensor, and intake throttle to control assisted DPF regeneration automatically and prevent PM from over-accumulating in the SF. The Yanmar engine uses a stepped approach of both Automatic and Back-up regeneration modes. A detailed description of this process is provided the Engine Owner's Manual, but a brief summary is also provided below.

Automatic Regeneration Modes – These modes are performed automatically by the Engine Control Unit and operate without input from the machine operator or impact to mulching operations.

Self Regeneration (Normal) – Regeneration without the use of assistance devices (e.g. intake throttle). During operation at high speed or high load, the exhaust temperature rises to a sufficient level such that PM is continuously combusted and eliminated.

Assisted Regeneration – Regeneration with the use of assistance devices (e.g. intake throttle). When the differential pressure in the SF inlet/outlet in the DPF rises, the differential pressure sensor installed on the DPF detects the increase. The Engine Control Unit (ECU) commands the intake throttle to adjust the amount of engine intake air to increase exhaust temperature to a sufficient level such that PM is combusted and eliminated.

Reset Regeneration – Regeneration with the combined use of Assisted Regeneration and post-injection. Approximately every 100 hours of operation, the Assisted Regeneration and post-injection are automatically used together to control regeneration by increasing the exhaust temperature to burn off and remove PM.

Back-up Regeneration Modes – These modes require direct action from the operator to be performed and the machine cannot be used for mulching operations while Back-up regeneration is underway.

Stationary Regeneration – Although the DPF performs the regeneration control, if the operation conditions with idling at no load and low speed/low load operations are frequently repeated, the PM may not be regenerated. If the ECU determines that performing the Stationary Regeneration is required at this time, the operator will be alerted via the control panel that a Stationary Regeneration is required. A Stationary Regeneration takes approximately 30 minutes to complete.

Recovery Regeneration – Recovery Regeneration occurs when Stationary Regeneration cannot be completed and the engine has gone into Limp Home Mode. The Recovery Regeneration takes approximately 3 hours to complete. If the Recovery Regeneration is unsuccessful, the Soot Filter will need to serviced by a Yanmar certified service center.

OPTIONS SCREEN - REGENERATION (CONTINUED)

RESET REGENERATION NORMAL OPERATION - DISPLAYS

Return to the options screen shown here.

Press the REGEN softkey to enter the regeneration system menu.

The engine control panel is set at the factory to allow Reset Regeneration to occur automatically. However, the operator has the option to inhibit Reset Regeneration via the control panel ***IF*** the work environment poses a risk to safe regeneration.

During machine operation with Regeneration in the "Allow" (non-Regen Inhibit) state, on the control panel, when the ECU begins Reset Regeneration, a notification and regeneration icon will display at the bottom of the screen.

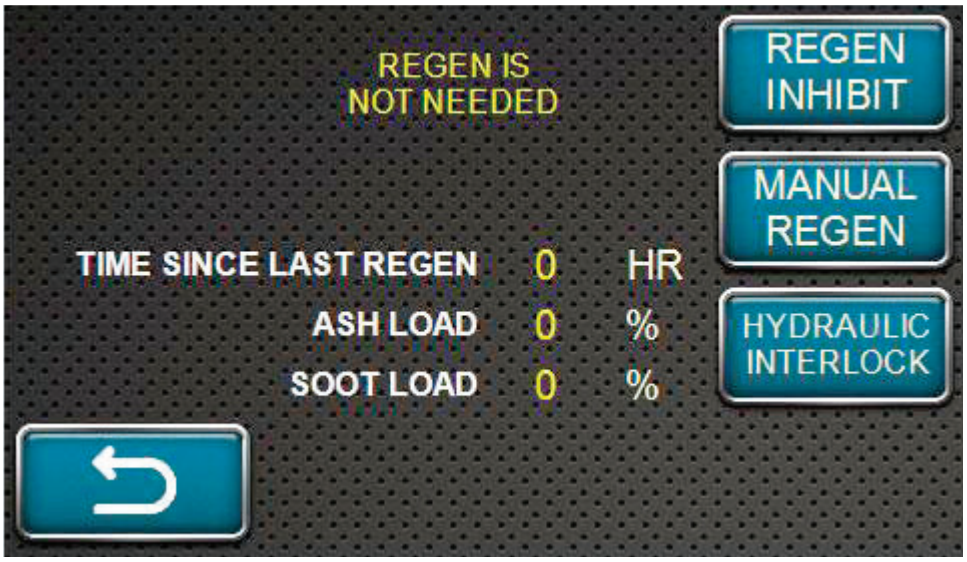

NOTE: The ECU will not perform Reset Regeneration within the first 50 hours of engine life.

NOTE: The machine can be operated normally during Reset Regeneration. The machine can also be turned **OFF**. If this occurs, Reset Regeneration will resume again when the machine has been turned back **ON** and the DOC temperature has risen to a sufficient level.

⚠ CAUTION ***During Reset Regeneration, post-injection is used and fuel is burned directly inside the DPF (burned by chemical reaction inside the Diesel Oxidation Catalyst (DOC). Through this heat, regeneration occurs inside the SF, but the combustion increases the temperature of the exhaust gas to close to 600° C (1112° F). Be careful that neither people nor flammable materials are near the exhaust gas outlet.***

OPTIONS SCREEN - REGENERATION (CONTINUED)

RESET REGENERATION NORMAL OPERATION - DISPLAYS

NOTE: During Automatic Regenerations, the following conditions may occur due to the characteristics of the DPF system, but they are not malfunctions.

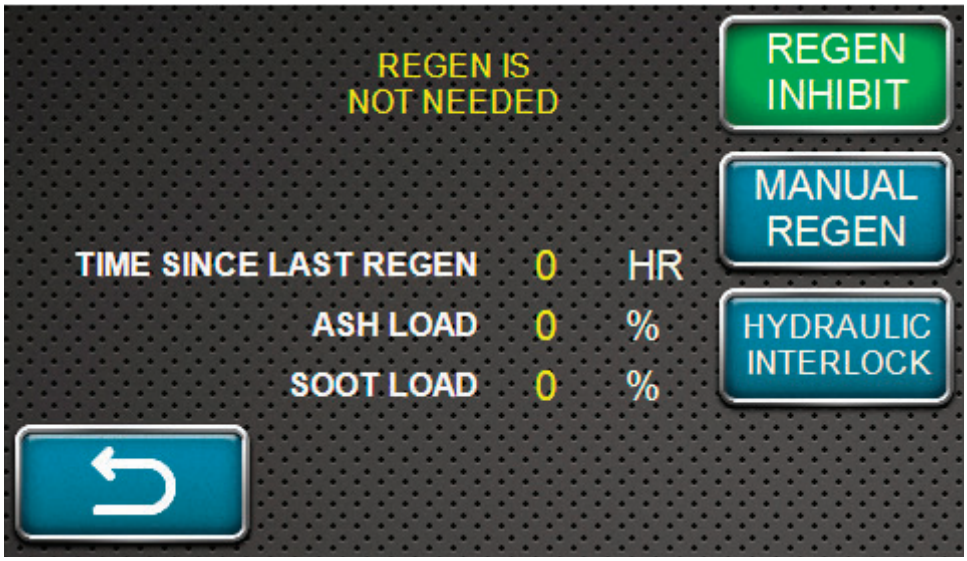

- The engine sound may change during idling operation at no load.
- White smoke may be discharged from the exhaust pipe right after starting a cold engine or during acceleration. This is due to the discharge of water vapor. When the exhaust temperature increases, the white smoke disappears.
- The exhaust gas is purified through the catalyst installed in the DPF, so the smell of the exhaust gas is different from the exhaust gas of a conventional diesel engine.

OPTIONS SCREEN - REGENERATION (CONTINUED)

RESET REGENERATION STANDBY DUE TO INHIBIT SWITCH

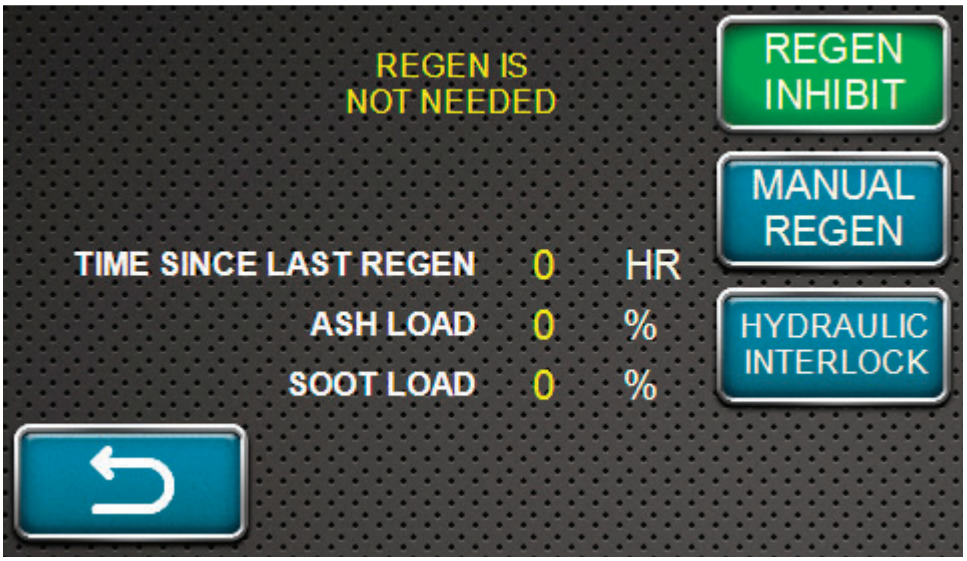

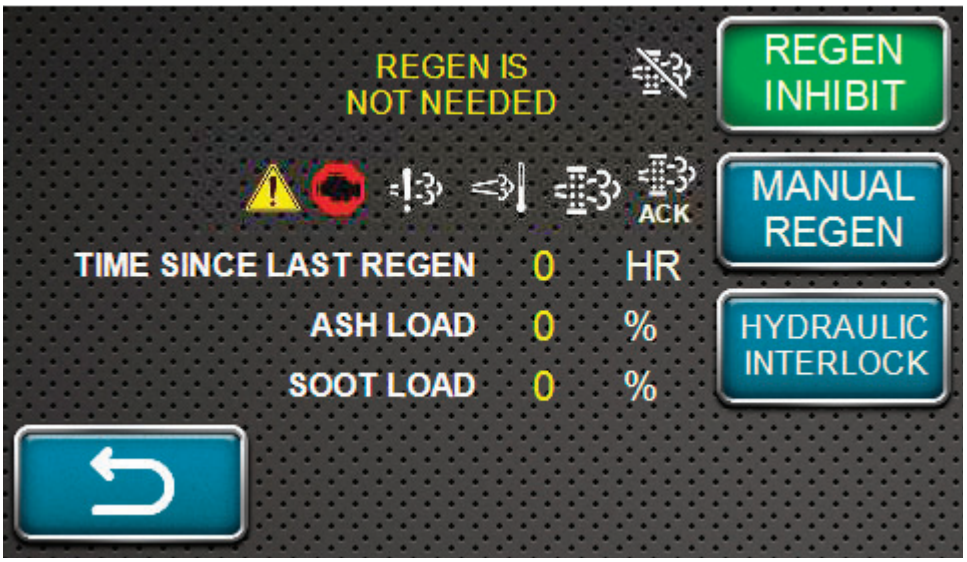

During machine operation with Regeneration in the *Inhibit* state on the control panel, a notification and regeneration inhibited icon will display at the bottom of the screen. If the ECU determines that Reset Regeneration is required, a Auto Regeneration request will be displayed. If the operator allows the regeneration, it will begin and a notification and regeneration icon will display at the bottom of the screen. If the operator delays the regeneration, the display will go to dual mode with one display showing the regeneration inhibit icon and the regeneration request continuously displayed at the bottom of the screen. Further, the Auto Regeneration request message will re-display every 30 minutes. The machine can continue to operate with Reset Regeneration inhibited for 3 hours, however, after 3 hours, a Stationary Regeneration request may occur.

RESET REGENERATION STANDBY DUE TO LOW DOC TEMPERATURE

For Reset Regeneration to begin, the DOC temperature has to be at a sufficient level. If the DOC has not reached this temperature and Reset Regeneration is required, then a notification to Increase RPM/Load and the Regeneration icon will be displayed. Once the DOC reaches sufficient temperature, Reset Regeneration will begin and a notification and regeneration icon will display at the bottom of the screen.

OPTIONS SCREEN - REGENERATION (CONTINUED)

STATIONARY REGENERATION BY ENGINE MANAGEMENT

If the ECU determines that performing the Stationary Regeneration is required, the operator will be alerted via the control panel that a Stationary Regeneration is required via a Diagnostic Trouble Code (DTC) even if Regeneration on the control panel is set to Inhibit. The operator should immediately conduct the Stationary Regeneration by performing the following operation.

1. Move the machine to a well-ventilated and safe location.
2. Press REGEN softkey.

3. Press the HYDRAULIC INTERLOCK softkey.

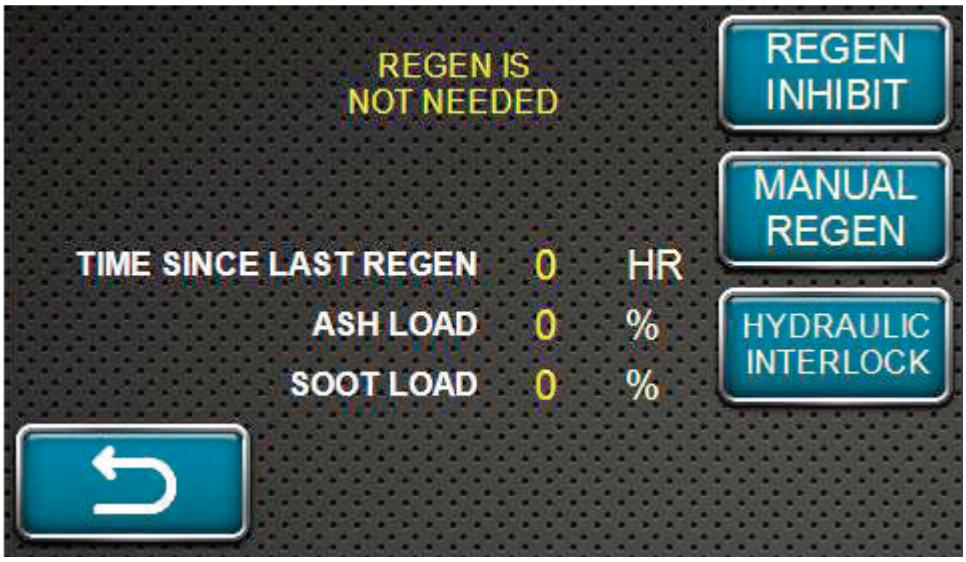

OPTIONS SCREEN - REGENERATION (CONTINUED)

STATIONARY REGENERATION BY ENGINE MANAGEMENT

4. Press the MANUAL REGEN softkey.

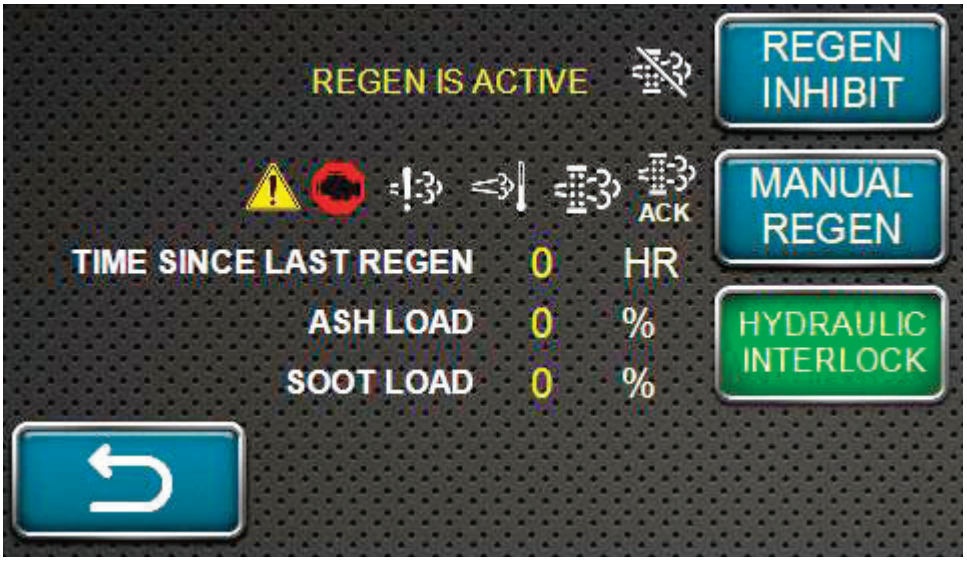

Note: Stationary Regeneration will not begin if any of the following conditions are present:

- Coolant temperature is less than 60° C (140° F)
- The engine has not been running for 15 minutes
- An important DTC is active
- If the hydraulic system is on
- Idle speed is too high

If these conditions are present, a notification will be displayed. Once these conditions are corrected by the operator, acknowledge the message and Stationary Regeneration will begin.

5. At this point, the ECU will take over control of the engine to perform the Stationary Regeneration and a notification of “Stationary Active” and the regeneration icon will be display along with a status bar (0 to 35 minutes) at the bottom of the screen.

Note: When the Stationary Regeneration starts, the engine speed increases gradually to high idle speed, then the regeneration begins and may modulate engine speed throughout the process.

Note: If Stationary Regeneration needs to be interrupted for any reason, turn off the key switch. Once the machine is restarted, the Stationary Regeneration request will be repeated.

Once Stationary Regeneration is complete, a notification will be displayed and the engine will return to low idle, but will not automatically turn off. Normal machine operation can resume.

Note: Although not recommended, the engine can be run in Stationary Standby mode (delaying Stationary Regeneration) for a total of 10 hours. For the first 2 hours, the engine power will be reduced to 85%. For the remaining 8 hours, engine power will be reduced to 50%. If the Stationary Regeneration is not performed when requested by the ECU, an excessive amount of PM will accumulate. Abnormal combustion of PM may cause damage to the DPF after extended operation in Stationary Standby mode.

OPTIONS SCREEN - REGENERATION (CONTINUED)

MANUAL STATIONARY REGENERATION - OPERATOR REQUEST

The operator has the option of performing a Manual Stationary Regeneration should work conditions/schedule require. Manual Stationary Regeneration can only be completed after the engine has accumulated 50 hours or more since its last regeneration.

1. Move the machine to a well-ventilated and safe location.
2. Press REGEN softkey.

3. Press the HYDRAULIC INTERLOCK softkey.

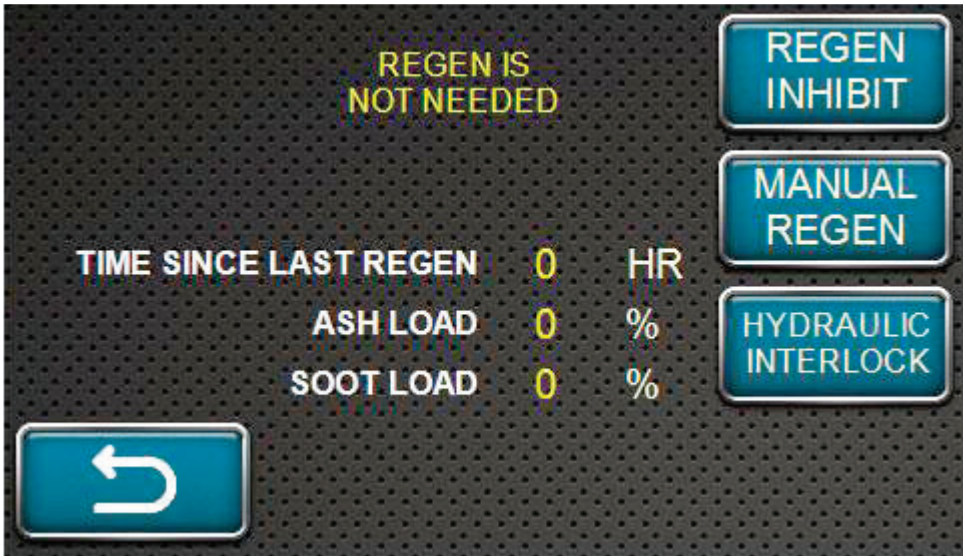

OPTIONS SCREEN - REGENERATION (CONTINUED)

MANUAL STATIONARY REGENERATION - OPERATOR REQUEST

4. Press the MANUAL REGEN softkey.

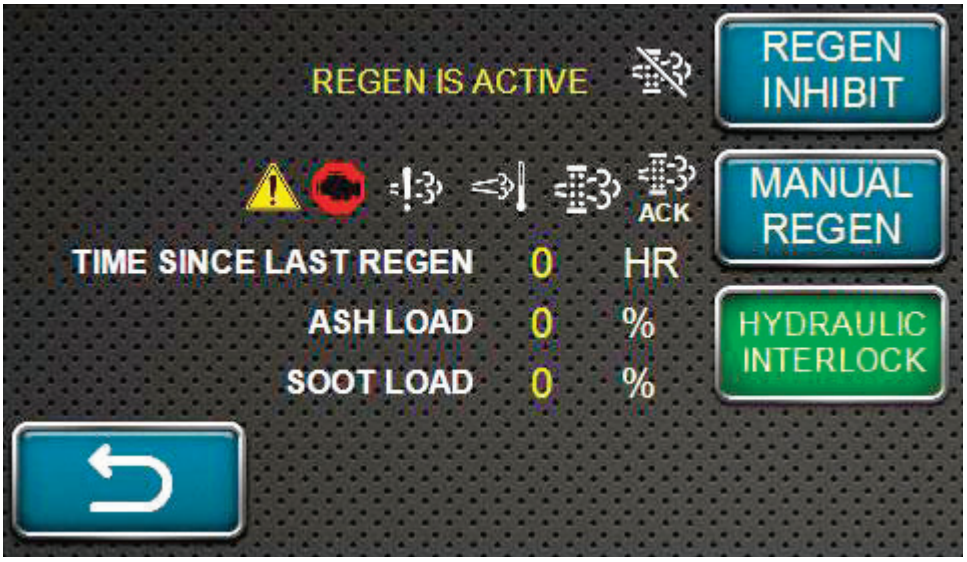

Note: Stationary Regeneration will not begin if any of the following conditions are present:

- Coolant temperature is less than 60° C (140° F)
- The engine has not been running for 15 minutes
- An important DTC is active
- If the hydraulic system is on
- Idle speed is too high

If these conditions are present, a notification will be displayed. Once these conditions are corrected by the operator, acknowledge the message and Stationary Regeneration will begin.

5. At this point, the ECU will take over control of the engine to perform the Stationary Regeneration and a notification of “Stationary Active” and the regeneration icon will be display along with a status bar (0 to 35 minutes) at the bottom of the screen.

Note: When the Stationary Regeneration starts, the engine speed increases gradually to high idle speed, then the regeneration begins and may modulate engine speed throughout the process.

Note: If Stationary Regeneration needs to be interrupted for any reason, turn off the key switch. One the machine is restarted, the Stationary Regeneration request will be repeated.

Once Stationary Regeneration is complete, a notification will be displayed and the engine will return to low idle, but will not automatically turn off. Normal machine operation can resume.

CONTROL PANEL GUIDE AND SYSTEM OPERATION (CONTINUED)

OPTIONS SCREEN - REGENERATION (CONTINUED)

RECOVERY REGENERATION

If Recovery Regeneration is not performed within the allowed 10 hours, the engine will go into Limp Home Mode and a DTC will be displayed. There are only two ways out of Limp Home Mode, perform a Recovery Regeneration or perform a SF exchange at a Yanmar certified service center. The operator should immediately attempt the Recovery Regeneration by performing the following operation.

1. Move the machine to a well-ventilated and safe location.
2. Press REGEN softkey.
3. Press the HYDRAULIC INTERLOCK softkey.
4. Press the MANUAL REGEN softkey.

Note: Stationary Regeneration will not begin if any of the following conditions are present:

- Coolant temperature is less than 60° C (140° F)
- The engine has not been running for 15 minutes
- An important DTC is active
- If the hydraulic system is on
- Idle speed is too high

If these conditions are present, a notification will be displayed. Once these conditions are corrected by the operator, acknowledge the message and Stationary Regeneration will begin.

CREW MEMBERS AND THEIR DUTIES

1. The Operator controls the placement of the mulch by moving and aiming the discharge hose.
2. The Loader(s) anyone responsible for adding material directly into the hopper.

THE MATERIAL-FEED SYSTEM

The material-feed system on the Material Blower has been designed to give fast and uniform mechanical feeding. The adjustable feeding rate and the automatic reverse control system allow the use of varied materials while obtaining maximum production. The system is an integration of the following four subsystems, all of which contribute to efficient material flow:

MATERIAL-HANDLING GROUP

The four major components of the material-handling group are the blower, the drag chain conveyor or floor, the feed roll, and the airlock.

The blower is a rotary lobe, positive displacement-type unit having two double lobe impellers. It is direct driven off the engine flywheel by a coupling. Therefore, whenever the engine is running, air is being pumped through the system. The blower is equipped with a relief valve limiting maximum air pressure to 12 psi (82,7 kPa), inlet and outlet silencer for noise attenuation, and inlet air filter.

The drag chain conveyor receives material from the hopper and conveys it to an opening located at the rear of the hopper where the feed roll is located. The feed roll ensures a uniform feed of bulk material to the airlock. The feed roll is powered by a variable speed hydraulic motor. The drag chain/conveyor is powered by a hydraulic motor that is linked in series with the feed roll hydraulic motor.

The airlock receives the material from the drag chain conveyor and pressurized air from the blower. Its primary function is to convey the bulk material from the atmospheric air to a sealed chamber where the blower air stream picks it up and blows it through and out the discharge hose. To enable the Material Blower to convey fibrous material, the airlock housing is equipped with cutting knives and the vanes on the rotor are angled and hardened. If any material should protrude above a vane, it will be sheared off, before the vane enters the close tolerance of the housing by a scissor-like action between the vane and cutting knife. The rotor of the airlock is direct-coupled to a gearbox and driven by a bi-rotational hydraulic motor.

HYDRAULIC SYSTEM

Hydraulic power for the Material Blower is generated by a fixed-displacement hydraulic pump that is driven off the engine auxiliary drive. The pump receives hydraulic fluid from the 25.5-gallon (96.5 L) reservoir through a service ball valve and suction hose. It is then delivered to the hydraulic manifold through an unloading valve. This hydraulic manifold block has three separate solenoid valves that control all of the functions of the Material Blower machine.

The hydraulic oil should be replaced per the lubrication schedule or if the oil becomes milky or gives off a burnt odor. The hydraulic oil filter must be replaced on schedule with a 5 micron absolute filter.

At time of manufacture, this unit contains Finn Vulhydra hydraulic oil. The chart below illustrates the operating temperature range of the Finn Vulhydra hydraulic oil and the ISO equivalents.

NOTE: Use equal to, or better than, a 5 micron absolute filtration.

NOTE: The Finn Vulhydra hydraulic oil may be substituted for either of the two ISO oils listed below. Please use the chart to determine what oil works best in your situation.

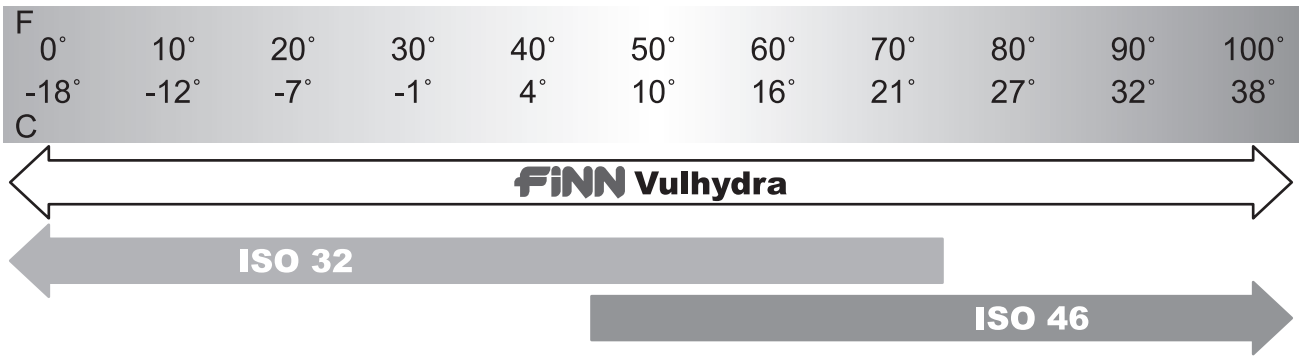

DESCRIPTION OF VALVE SECTIONS

The illustration shows the valve block and different hydraulic circuits. Each circuit is controlled by two valves. The floor and airlock valves are directional valves that can be manually stroked by inserting a small rod or screwdriver into the hole on top or bottom of the solenoid.

A. AIRLOCK

The right valve section of the manifold runs the airlock. The spool in the valve is factory-set so the airlock turns at about 16 RPM. The speed of the Airlock can be adjusted using PFC-1. There is a pressure switch on the forward circuit that is set for 1,500 psi (10,342 kPa) that triggers the auto-reverse function on the airlock. Normal rotation of the airlock is clockwise if viewing from the driver side of the machine.

B. FLOOR (DRAG CONVEYOR)/FEED ROLL

The left valve section controls the floor and feed roll speed. It is an electrically-driven proportional valve that is controlled by the floor increase (**FLOOR INC**) and floor decrease **(FLOOR DEC)** buttons on the keypad of the main control panel and the toggle switch on the radio remote trasnmitter. Pressing the buttons or toggling the switch up or down varies the input voltage to the solenoid and moves the spool in the valve accordingly, allowing more or less oil flow to the floor and feed roll. There is a pressure switch on the forward circuit that is set for 1,500 psi (10,342 kPa) that triggers the auto-reverse function on the floor.

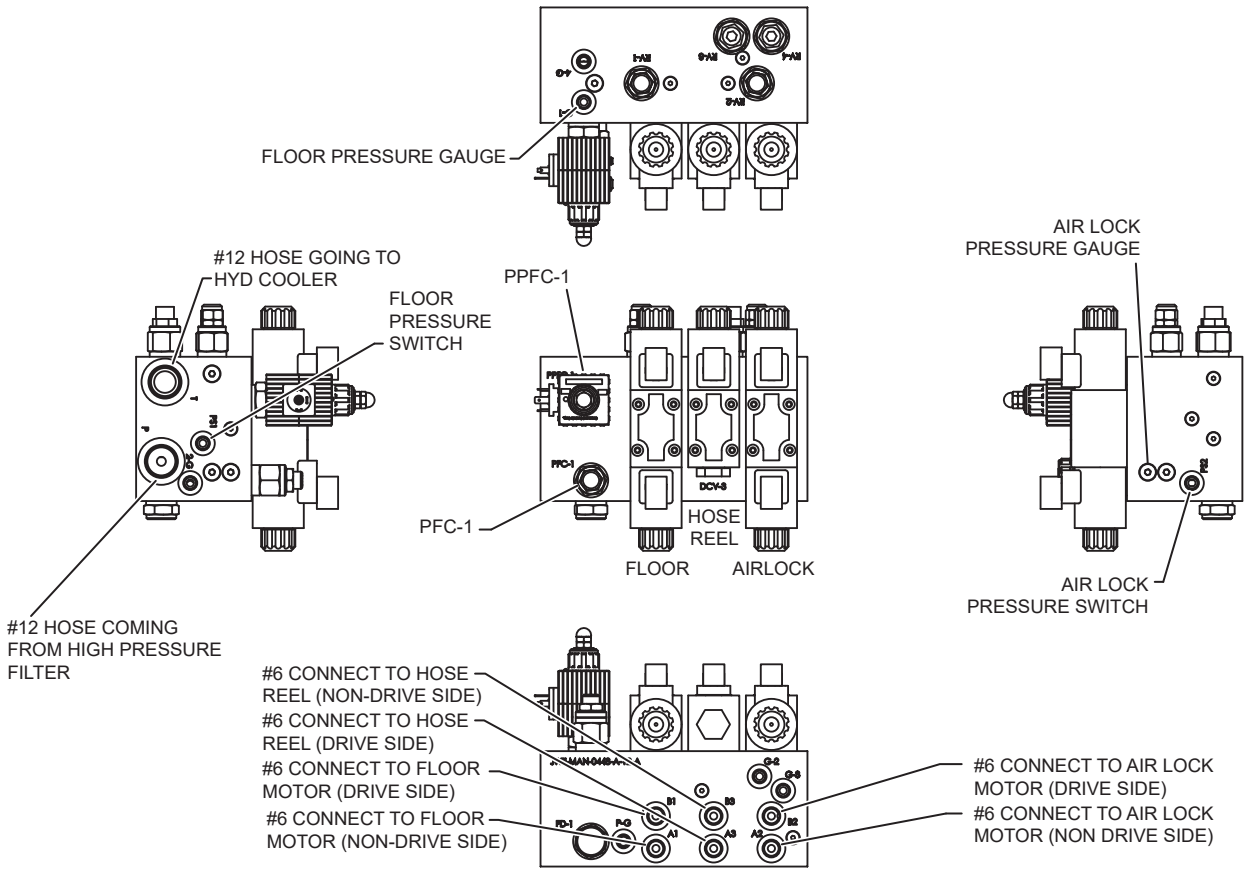

THE MATERIAL-FEED SYSTEM (CONTINUED)

HYDRAULIC CONTROL SYSTEM

The hydraulic control system is an electrical system that controls all the hydraulic functions on the Material Blower. This 12-VDC system runs off the engine electrical system. It is a programmable logic control (PLC) system located in the main control panel on the passenger-rear side of the machine. This module controls the solenoid valves in the hydraulic system. The solenoids are energized by way of the Deutsch connectors mounted on each solenoid.

When the **FLOOR** softkey on the control panel or the **MATERIAL FEED** toggle switch on the radio remote transmitter is activated, the proportional solenoid on the airlock valve section is energized, which starts the airlock. The floor and feed roll solenoid is energized automatically after a factory-set 2 second delay. This delay ensures that the airlock has a chance to clear itself. After the delay, the floor and feed roll will begin to move at the speed relative to the Floor speed. This speed can be set by using the floor increase and floor decrease softkeys on the control panel or the floor speed dial on the radio remote transmitter. Pushing the **FLOOR** softkey on the control panel allows the operator to temporarily turn off the floor to clear out the airlock.

As material drops into the top of the airlock, the pressure required to cut the material is monitored by the pressure switch. This switch is located on the forward port of the airlock valve section, in the manifold labeled PS-2 (see the Valve Block illustration). The switch is normally open. When the airlock motor stalls due to the rotor encountering an object it cannot cut, high pressure is created in the airlock circuit and the pressure switch closes. The amount of time the pressure switch is closed is monitored by a setting in the PLC box. If the switch remains closed for more than 0.5 second, the system automatically reverses the rotor by energizing the reverse solenoid. It also de-energizes the floor solenoid, thus shutting off the floor and the feed roll. The airlock will remain in reverse for approximately 3 seconds. The system will then restart the floor and feed roll, in the material feed direction, after allowing the airlock to clear itself.

When the **FLOOR** softkey on the control panel or the **MATERIAL FEED** toggle switch on the radio remote transmitter is deactivated, power is shut off to the solenoids controlling the hydraulic motors on the floor, feed roll and airlock. Please note that the hydraulics will also stop if the rear door on the feed roll housing is opened and cannot be restarted until the door closed and the **FLOOR** softkey is pushed.

NOTE: The hydraulic system on this machine can also be stopped by pressing the **Emergency Stop (E-Stop)** button either on the main control panel or the radio remote. This method should only be used in case of emergency.

THE MATERIAL-FEED SYSTEM (CONTINUED)

RADIO REMOTE TRANSMITTER

This Material Blower is equipped with a HBC Radio Remote Transmitter to control the **MATERIAL START/STOP**, the **FLOOR (speed) INCREASE/DECREASE**, and the **ENGINE (RPM) INCREASE/DECREASE**. It also contains an Emergency Stop (e-stop) button that will shut down the engine.

To turn on the Radio Remote, pull out the red machine stop button to release it to its UP position. To utilize the Material Feed Start/Stop feature of the radio remote transmitter, the initial start must occur at the point in the initial startup at the control panel. Turn the radio remote on.

Turn the ignition key clockwise to the **START** position. The key will return to **RUN** position during operation once released. Press the power button again on radio remote to enable radio remote functionality.

The **MATERIAL INCREASE/DECREASE** function on the radio remote transmitter can be used to change the floor speed and effectively adjust the output of mulch from the machine.

For additional information, see Control Guide section.

MULCHING WITH THE MATERIAL BLOWER

1. Check all areas listed under PRE-START EQUIPMENT CHECK section of this manual.
2. Undo the manual lock on the hose reel and unwind hose. Attach material hose to discharge port of the airlock assembly.

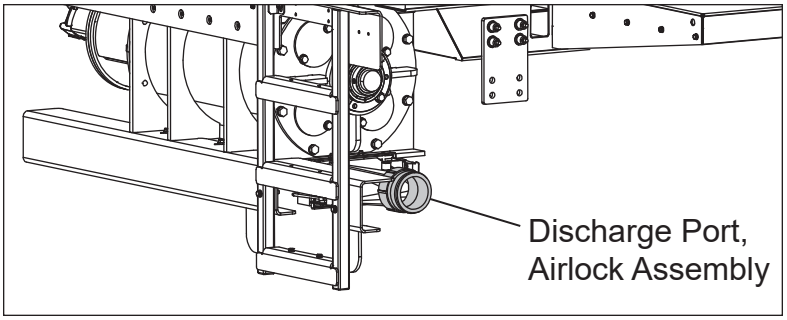

3. Start the engine following all the steps listed under STARTING PROCEDURE section of this manual.
4. Press the **BLOWER** softkey on the control panel (if in Local Mode) or press the **RUN** toggle switch (if in Radio Mode). Refer to the CONTROL PANEL GUIDE AND SYSTEM OPERATION section for running the unit in each mode. This will allow the material flow speed to be adjusted.
5. With a firm grip on the hose, start material flow. Press the **FLOOR** softkey on the control panel (if in Local Mode) or press the **MATERIAL FEED** toggle switch (if in Radio Mode). This will allow the material delivery speed to be adjusted.
6. Adjust floor speed and engine throttle (blower speed) to achieve the desired amount of material flow.
7. At the end of the load, push **FLOOR** softkey to turn floor delivery system off (in Local Mode) or **MATERIAL FEED** toggle switsh down on the radio remote transmitter (in Radio Mode) to stop flow of material to airlock.
8. At the end of the load, push **BLOWER** softkey to turn blower system off (in Local Mode) or **RUN** toggle switsh down on the radio remote transmitter (in Radio Mode) to stop flow of material from the airlock.
9. Detatch material hose from discharge port of the airlock assembly and return to hose reel. Use the rewind feature to return the hose to the hose reel and then manually lock in place for safe transportation.
10. Shut down the engine.Ensure all moving parts of the unit have come to a complete stop.

MATERIAL BLOWER ADJUSTMENTS

The Material Blower has been designed to be as simple as possible to operate. The feed roll and airlock are designed to create a smooth, consistent flow of material from the hopper to the discharge. However, material conditions can change from one load to the next or from one day to the next. Weather conditions and material conditions can influence performance of the Material Blower. Adjusting the floor speed, blower speed, and occasionally, the metering gate and/or airlock speeds will allow the Material Blower to efficiently convey many different types of mulch.

Knowing when and how much to adjust the floor is the key to maximizing the machine's performance. The floor conveyor speed is controlled by the **FLOOR** controls on the control pad and the radio remote transmitter. Refer to the CONTROL PANEL GUIDE AND SYSTEM OPERATION section for more information on floor speed and floor speed settings.

MATERIAL BLOWER ADJUSTMENTS (CONTINUED)

The floor speed can be increased using the basic controls until certain warning signs appear. They include the following:

A. *CONSISTENT HOSE SHOCK*

The Material Blower uses a large volume of air to blow the mulch material through the discharge hose, which, at times, can become difficult for an operator to handle. Hose shock is usually due to partial plugging around the discharge. When the material gets dislodged, the larger clumps are shot through the hose and this action can make the hose jump significantly. If rough shock waves become consistently tough on the operator at the end of the hose, the floor can be turned down to smooth out the flow of material into the airlock. Lowering the engine RPM can also smooth out hose shock by slowing down the air flow, but be careful not to lower the engine RPM too much, as this can cause excessive plugging because there is not enough airflow to move the material. When blowing wet, heavy material, slowing the airlock speed can smooth the material flow by evenly introducing the material to the air steam. Generally, the airlock should not be run slower than 10 RPM.

B. *EXCESSIVE AUTO-REVERSING*

If the airlock starts to auto-reverse more than three times per minute, the airlock is being overfed and the floor speed should be turned down. Excessive auto-reversing leads to lower material feed when compared to a lower, properly adjusted floor speed. This condition will occur more often with green, stringy mulch or less-processed material that contains larger chunks of wood that the airlock may have to cut.

C. *BLOWER RELIEF*

The blower on your machine has a relief valve in the air line to protect the blower against a large back pressure that could build if the line becomes plugged. The relief valve, set for 12 psi (83 kPa), is located directly behind the blower in the engine area on the driver's side of the machine. A blockage, temporary or otherwise, can trip the relief valve, which causes a loud whining noise to be heard from the engine area. Occasional blowing off through the relief valve is expected, as long as the machine can clear itself. However, if the relief valve goes off repeatedly in a 10-second time span, then the discharge area or hose is in danger of becoming completely blocked. The floor speed should be immediately reduced until the relief valve is not heard consistently going off. Partial plugging most often occurs with less-processed material or if the mulch is wet and dense.

D. *MATERIAL METERING GATE*

The metering gate is a manually-operated gate located inside the rear of the hopper. It is a vertical panel that can be moved up and down, as well as in and out, from the feed roll. When changing the metering gate location, it is important to understand the three main material groups. The closer the material is to Dry, Aged Material, the closer the gate should be to the feed roll, and the farther it should be from the floor. The metering gate should be moved away from the feed roll and closer to the floor, the closer the material is to Wet or Heavy Material, leaving Green Material somewhere in-between the two. The better the material is, the less interaction the metering gate should have; the heavier, wetter, and harder the material is, the more interaction the metering gate needs.

CLEARING A BLOCKAGE

If the unit does become plugged and the machine can not clear itself, immediately shut down the engine, either by pressing the emergency stop on the Radio Remote Transmitter or the Main Control Panel. Allow Material Blower to come to a stop. Shut engine off and allow all moving components to stop. Perform the following steps for clearing a blockage.

1. Disconnect the discharge hose and determine if the blockage is in the airlock discharge. Any blockage should be seen through the outlet. If there is no blockage, then the hose is plugged somewhere.
2. If there is blockage, loosen the clamps on the front and the rear of the discharge outlet.
3. Remove the discharge.
4. Remove any blockage and clean the discharge of any mulch debris, especially on the gasket surface, so that it can seal tightly.
5. Install the discharge outlet and clamp into place.
6. Reconnect the discharge hose if it is not plugged.
7. Restart the machine, then run the engine to full RPM to clear out the airlock and any mulch remaining in the hose.
8. Resume normal operation.

Troubleshooting Chart

Symptom	Probable Cause	Suggested Solutions
Engine will not start	ECM has generated a fault code for the engine.	Check fault code and remedy.
	No fuel or fuel system has lost prime.	Add fuel or prime fuel system with fuel filter priming pump.
Airlock not turning	Material feed system has not been activated.	Press **MATERIAL START** button on the hardwired material start/stop pendant to activate the material feed system.
	Airlock clean out door switches are not closed.	Make sure doors are closed and latched to ensure switches are closed. If doors are closed and switches remain open, then the doors will need to be adjusted.
	Airlock speed control turned down too far.	Adjust airlock speed control (PFC-1).
Floor not turning	Floor circuit is not "on"/ activated.	Press the **FLOOR ON/OFF** button on the keypad.
	Solenoid valves have lost power.	Check Deutsch connectors to make sure they have power and check voltage across the terminals.
	Solenoid valve is stuck due to contamination.	Press override button in the center of the solenoid valve cartridge to manually shift the valve.
	Feed roll/floor jammed.	Check gauge reading; if 2000 psi, push **FLOOR ON/OFF** button and reverse floor with auto reverse (**AUTO REV.**) button.
Airlock constantly auto-reversing	Overfeeding airlock.	Decrease floor speed. See Material Blower Adjustments section for tips.
	Dull airlock knives.	Check knife clearance; sharpen or replace knife if dull or chipped.
	Bulk material is not processed enough causing airlock to cut materials.	Pick a more processed bulk mulch material.
Airlock stalling, not auto-reversing	Pressure switch is not closing at 2,400 psi.	Check pressure switch connections or replace switch if necessary. Check relief setting airlock.

Troubleshooting Chart (Continued)

Symptom	Probable Cause	Suggested Solutions
Discharge material pulsing; not smooth	Too much air.	Decrease engine throttle and floor speed accordingly.
	Airlock turning too fast or too slow.	Adjust airlock speed with PFC-1.
	Partial plugging in airlock discharge.	Check airlock discharge for blockage and air leaks.
Engine Overheat	There is a lack of Coolant.	Check for leaks and add coolant.
	Radiator is obstructed.	Wash radiator fins with a hose to remove any foreign material buildup. Do **NOT** use a pressure washer to clean radiator fins or damage will occur.

MAINTENANCE

⚠ CAUTION ***Turn engine OFF and disconnect battery before servicing equipment. Failure to comply could result in minor personal injury, product damage, or property damage.***

DAILY - AFTER EVERY 4 TO 8 HOURS OF OPERATION

1. Check engine and blower air cleaner filters for dirt and debris. Remove and clean with dry compressed air if necessary. If the filter cannot be cleaned, it must be replaced immediately.
2. Check engine coolant and oil levels. See engine manual.
3. Check hydraulic oil level in reservoir. The oil should be about three-fourths of the way up the sight glass located on the hydraulic tank.
4. Check blower oil level. See blower manual.
5 Clean out front floor chain compartment. Unclamp cleanout cover from the front of the hopper and remove cleanout cover to expose floor chain. Remove any built-up material from the cleanout and around the sprockets. This will minimize material overflow through the front take up bearings during daily operation.
6. Check fuel level.

WEEKLY - AFTER EVERY 50 HOURS OF OPERATION

1. Lubricate the bearings on the floor, the blower, and on each end of the feed roll shaft. Wipe each bearing before lubrication to remove any accumulated dirt and prevent overheating.
2. Blow out radiator fins with dry compressed air. Do not use a pressure washer, as this will damage the radiator fins.
3. Remove and clean or replace air cleaner elements on the engine and rotary blower. To clean elements, use clean compressed air.
4. Check the oil level in the airlock gearbox. Add or replace if necessary.
5. Check the gear case on the blower (see Lubrication Chart information).
6. Check the tension on the floor conveyor chain. Adjust so the chain slats clear the bottom pans, on the return side, by 1/2 in. (13 mm), by turning the jackscrews on each end of the idler shaft. Adjust evenly, making sure the shaft does not shift sideways.
7. Check airlock knives for wear, chips, and clearance.

⚠ DANGER ***Knives have very sharp edges that can cause serious injury. Handle with care. Failure to comply WILL result in severe personal injury or death.***

WEEKLY - AFTER EVERY 50 HOURS OF OPERATION (CONTINUED)

To change the knife (or knives), use the following:

A) Remove the five bolts that hold the knives and transition doors to the airlock knife shelves.

B) Remove the doors and knives.

C) Clean all dirt and debris from shelves.

D) Back out the two center jacking screws on each shelf.

E) Compare the replacement knife to the removed knife. If the new knife is wider, back the two outside jacking screws out by at least that amount. Count the turns and back both screws out evenly.

F) Lay the knife on the knife shelf. Ensure the knife is installed with the cutting angle edge facing down. Loosely install the two outer, and the middle knife mounting bolts. Tighten the mounting bolts enough to hold knife in position, while still allowing it to be moved.

G) Install a block of wood, approximately 2 in. x 4 in. x 6 in. (5cm x10cm x 15cm) between the knife and the closest vane at the center of the rotor length. Pinch the wood between the knife and the vane by turning the rotor shaft with a pipe wrench.

H) While keeping pressure on the knife, tighten the three mounting bolts.

I) Remove the wood block and check the clearance between the knife and the rotor vane, using a feeler gauge at the three mounting bolts.

NOTE: If the knife touches the vane at any point, loosen the three mounting bolts, back off the jacking screws evenly, and repeat steps G, H, and I until clearance is obtained.

J) Loosen the three mounting bolts; use the jacking screws to close the gap. One full turn of the screw moves the knife 0.070 in. (1.8 mm).

K) Tighten mounting bolts as explained in steps G and H.

L) Repeat steps, G, H, I, and J until a knife-to-vane clearance of no more than 0.006 in. (0.15 mm) is obtained at the closest point(s).

M) Once set, install the other two mounting bolts and tighten.

N) Run the two center jacking screws into contact with the knives. Lock all jacking screws in place with the jam nuts.

O) Remove three mounting bolts for transition door, and install the door.

P) Repeat procedure for other knife (if equipped).

Q) Immediately have the removed knives sharpened. Do not attempt to grind the knives by hand. The knives must be ground straight and true on a surface grinder by an experienced knife sharpener. Have the knives ground to the profile shown in the illustration below.

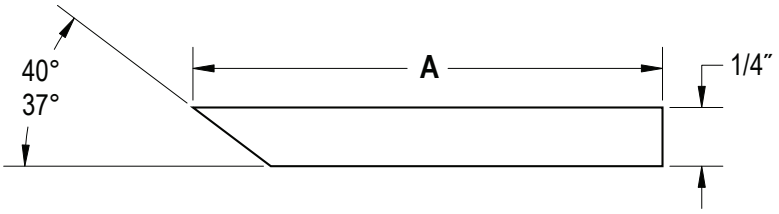

Knife Profile

NOTICE ***When dimension "A" has been reduced to 2-3/8 in. (6 cm), the knife must be discarded.***

MAINTENANCE (CONTINUED)

AFTER FIRST 100 HOURS OF OPERATION

1. Change engine oil and filter after first 100 hours, then every 250 hours after that, following the engine manufacturer's recommendations.
2. Change the gear box oil on the blower; use ISO Grade 100 Extreme Pressure Gear Oil if your ambient operating range is from 32° F to 90° F. If your ambient operating range is above 90° F, use ISO Grade 150 Extreme Pressure Gear Oil. Change oil every 1000 hours after that.
3. Change the gearbox oil on the airlock using SAE 90W gear oil. Fill oil to the side plug. Change every 1000 hours after that.

EVERY 3 MONTHS OR 3,000 MILES (4,800 KM) TRAILER UNITS

1. Check and adjust trailer brakes.
2. Torque wheel lug nuts to 115 ft.-lb. (156 N•m).
3. Check tire condition.

EVERY 12 MONTHS OR 12,000 MILES (19,300 KM) TRAILER UNITS

1. Inspect and repack wheel bearings.
2. Inspect trailer brake magnets, pads, drums, etc.

FLOOR CHAIN ADJUSTMENT: EVERY 500 HOURS

1. The floor chain tension should be checked every 500 hours. If the chain is too loose, the chain flights can buckle under the floor pan and damage the chain linkages and flights. If the chain is too tight, it can put added wear on the floor bearings and cause excessive chain stretch.
2. Shut the machine off and open the rear access door above the airlock. Remove any buildup under the floor pan between the chain links, and the rear catch pan, so that an accurate measurement can be made. Check the tension on the floor chain in the Material Blower, as shown in the figure below.

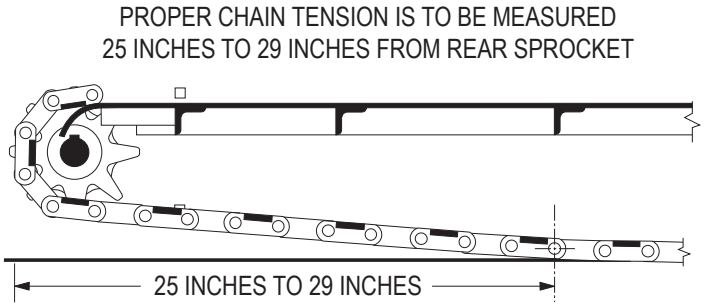

Floor Chain

3. To adjust the chain tension, find the take-up bearings on either side of the floorsill, near the front of the hopper. Using a 1-1/2-in. wrench, turn the tensioning rod clockwise to tighten the chain and counterclockwise to loosen it. Always turn both tension rods the same amount so that the chain is always square with the drive shaft. A misaligned chain can come off the sprocket and buckle.

WINTER SHUTDOWN AND STORAGE

1. Blow all material out of machine, turn engine OFF, set battery box disconnect to "OFF" and lockout switch for safety.
2. Remove the inlet elbow to the blower air chamber, and coat internals of impeller cylinder with a rust inhibitor, such as WD-40®. Reconnect piping to prevent foreign debris from entering blower chamber. Rotate the drive shaft three or four revolutions. Repeat this process every month or as conditions may require.
3. Store machine inside if possible. If machine is being stored outside, protect machine from the elements as best as possible.

NOTICE ***If the machine is stored outside, do not allow water to accumulate or ice to form in the airlock or discharge pan. A buildup of rust on the rotor vanes can lock up an airlock, and ice expansion can damage the airlock discharge.***

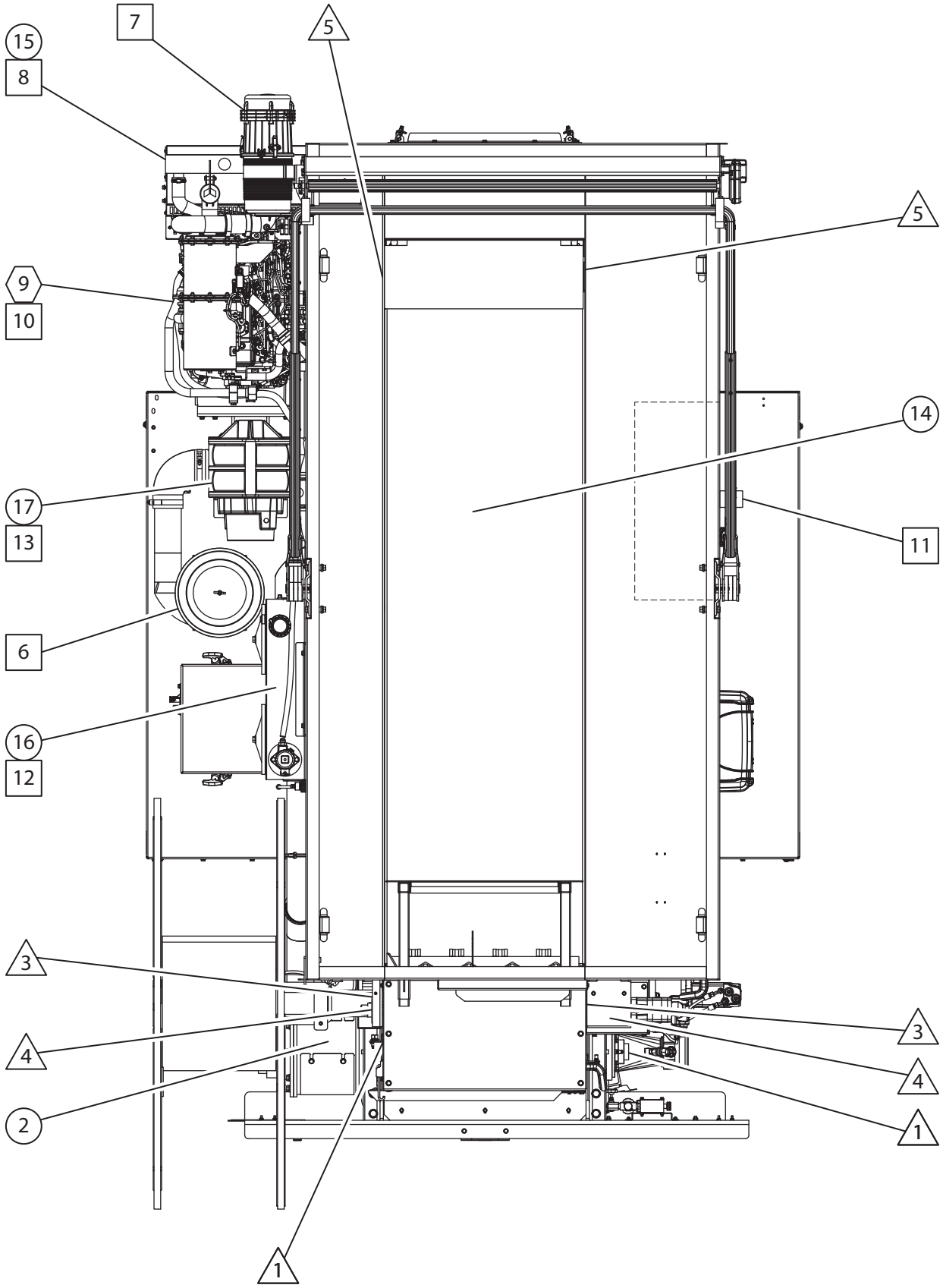

Lubrication Chart
Top View of Unit

LUBRICATION CHART

Ref. No.	Location	Lubricant	Frequency	Number
1	Lubricate Air Lock Bearing	CL	Weekly	2
2	Change Air Lock Gearbox Oil	GO	Seasonally	1
3	Lubricate Feeder Roll Bearing	CL	Weekly	5
4	Lubricate Floor Pillow Block Bearing	CL	Weekly	2
5	Lubricate Floor Take-Up Bearing	CL	Weekly	2
6	Check Blower Inlet Filter		Daily	1
7	Check Engine Air Cleaner		Daily	1
8	Check Engine Coolant Level	AF	Daily	1
9	Change Engine Oil and Filter	EO	See Engine Manual	1
10	Check Engine Oil Level	EO	Daily	1
11	Check Fuel Level	DF	Daily	1
12	Check Hydraulic Oil Level	HO	Daily	1
13	Check Blower Oil Level	BO	Daily	1
14	Lubricate Floor Chain	CH	Seasonally	1
15	Change Engine Coolant	AF	Seasonally	1
16	Change Hydraulic Oil and Filter	HO	Seasonally	1
17	Change Blower Oil	BO	Seasonally	1

LUBRICATION OR FLUID USED

CL Chassis Lubricant

BO Blower Oil
[if ambient operating range is from 32° F to 90° F, use ISO Grade 100 Extreme Pressure Gear Oil; if ambient operating range is above 90° F, use ISO Grade 150 Extreme Pressure Gear Oil]

AF 50/50 Anti-Freeze and Water Mixture

DF Diesel Fuel

HO Hydraulic Oil
[Finn Vulhydra hydraulic oil or the closest ISO equivalent (see Hydraulic System section)]

GO 90 W Gear Oil

CH Mineral Oil or Chain Lubricant

EO Engine Oil, 15W-40

FLUID CAPACITIES

Fuel	27.5 Gallons (103.7 L)
Hydraulic Oil	25.5 Gallons (96.5 L)
Engine Coolant	See engine manual
Engine Oil	See engine manual
Gear Box Oil	20 ounces (0.6 L)
Blower Oil	16.9 ounces (0.5 L)

TIME KEY

□ Daily (8 hours)

△ Weekly (40 hours)

○ Seasonally (500 hours

⬡ See Engine Manual

FINN MBH6 (MOUNTED) MATERIAL BLOWER TECHNICAL SPECIFICATIONS

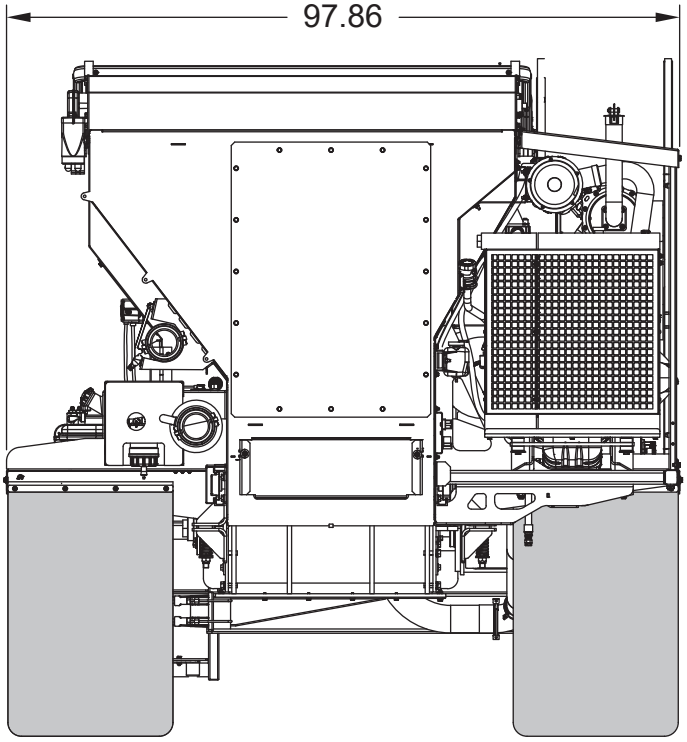

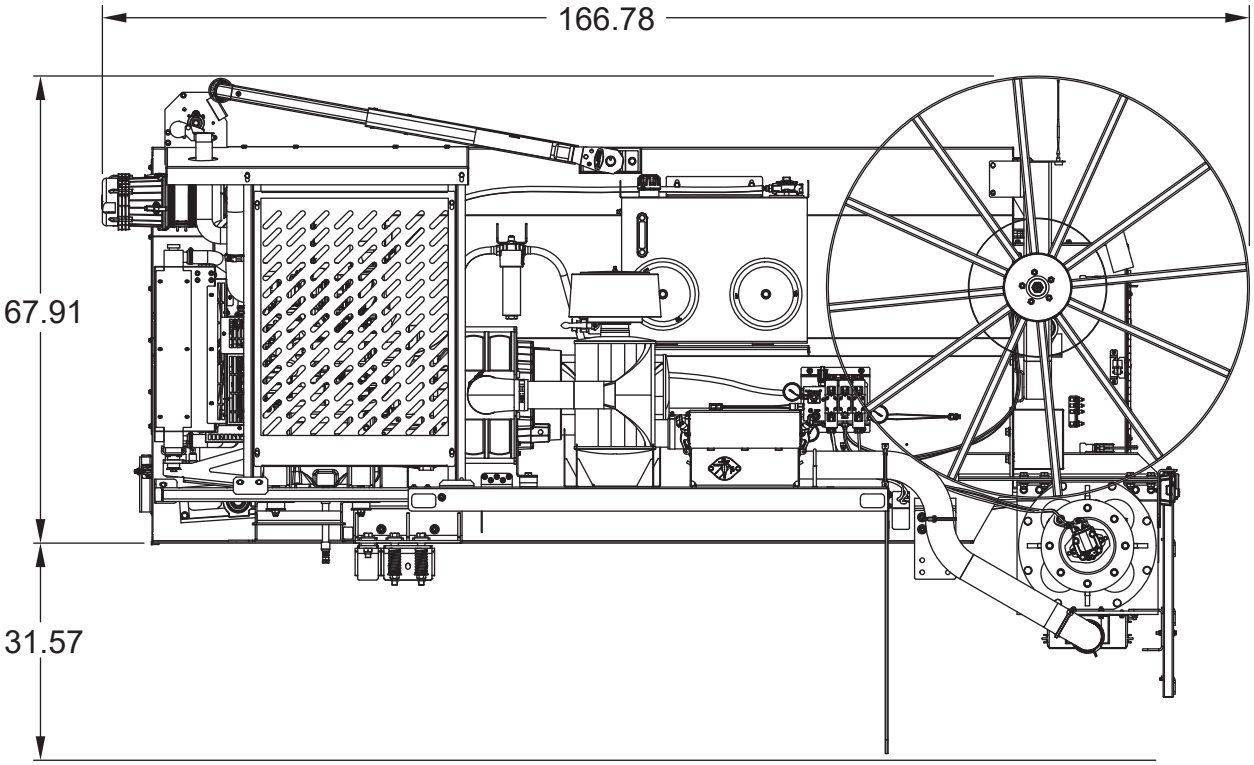

FINN MBH6 (MOUNTED) MATERIAL BLOWER TECHNICAL SPECIFICATIONS

POWER	Yanmar 4TNV98C (3.3L) Tier 4 Final Diesel, 67HP (50kW)
ENGINE SAFETY SYSTEM	Low oil pressure, Electronic Engine Control and Monitoring
CAPACITY	approximately 6 cubic yd. (4.6 m^3)
HOSE REEL CAPACITY	150 ft. (45.7 m) of standard 4 in. diameter hose
FUEL TANK CAPACITY	27 Gallon (102 Liter)
BLOWER	725 CFM @ 12 psi (20.5 cmm @82.7kPa)
EMPTY WEIGHT	
SKID	7,500 lbs. (3,402 kg)
WORKING WEIGHT*	
SKID	12,575 lbs. (5,704 kg)
LIGHTS	D.O.T. including side marker lights, an identification light, and a license plate light

** Working weights are approximate and do not include options or stored materials.*
Working weights are based on material at 850 lbs./cu. yd.

FINN MBH6 OPTIONAL TRAILER MATERIAL BLOWER TECHNICAL SPECIFICATIONS

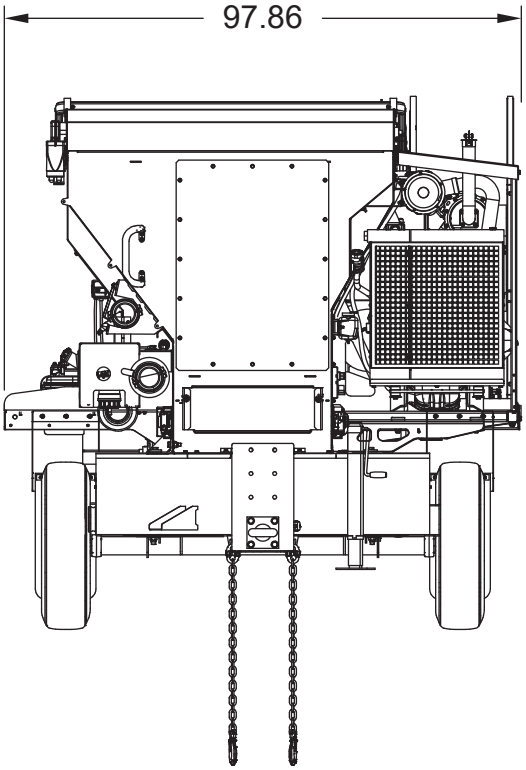

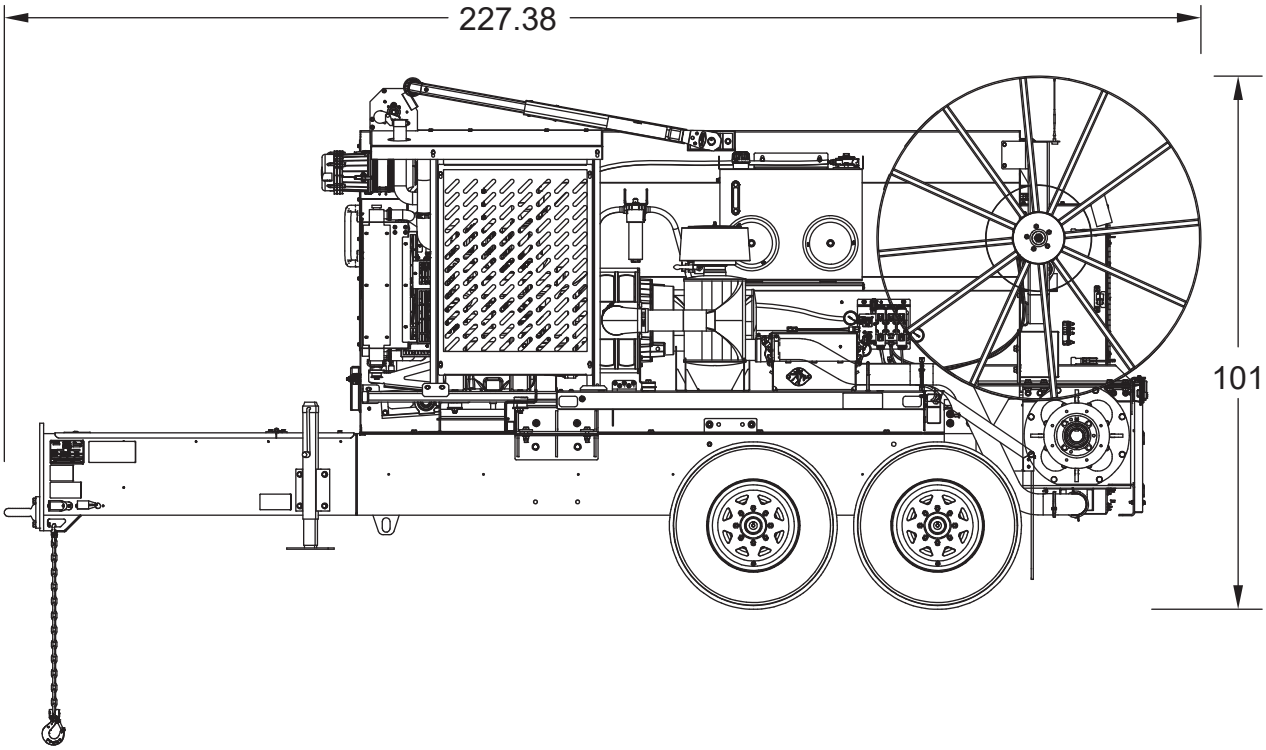

FINN MBH6 OPTIONAL TRAILER MATERIAL BLOWER TECHNICAL SPECIFICATIONS

POWER	Yanmar 4TNV98C (3.3L) Tier 4 Final Diesel, 67HP (50kW)
ENGINE SAFETY SYSTEM	Low oil pressure, Electronic Engine Control and Monitoring
CAPACITY	approximately 6 cubic yd. (4.6 m^3)
HOSE REEL CAPACITY	150 ft. (45.7 m) of standard 4 in. diameter hose
FUEL TANK CAPACITY	27 Gallon (102 Liter)
BLOWER	725 CFM @ 12 psi (20.5 cmm @82.7kPa)
EMPTY WEIGHT	
TRAILER	9,000 lbs. (4,083 kg)
WORKING WEIGHT*	
TRAILER	14,075 lbs, (6,385 kg)
LIGHTS	D.O.T. including side marker lights, an identification light, and a license plate light

** Working weights are approximate and do not include options or stored materials.*
Working weights are based on material at 850 lbs./cu. yd.

NOTES

MBH6

Parts Manual

Model OD

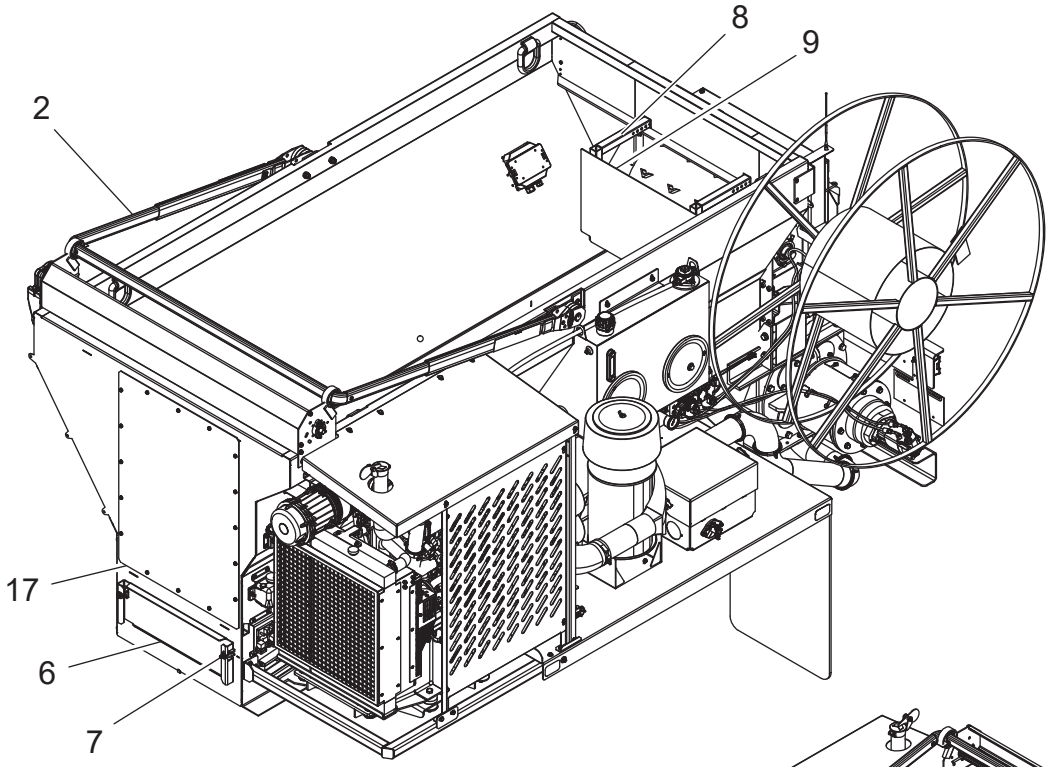

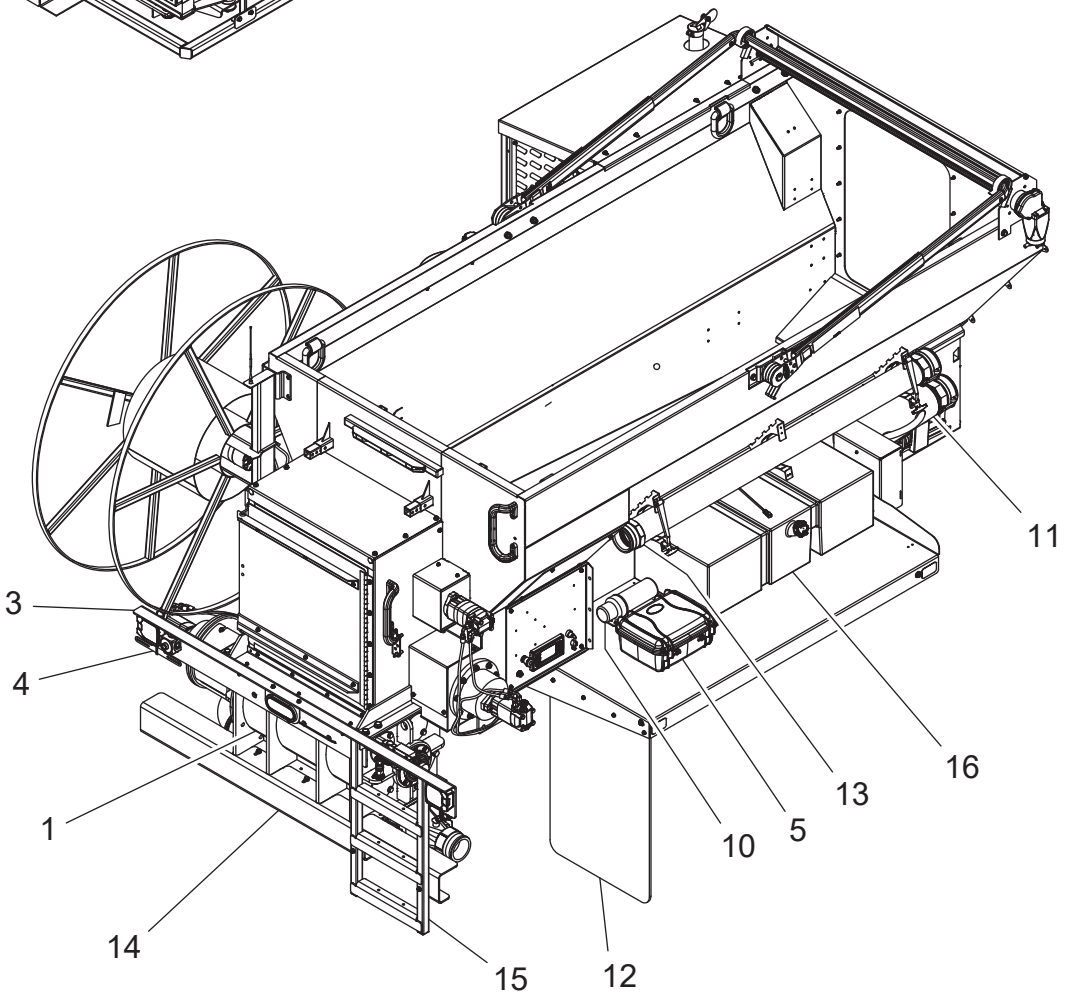

WHEN ORDERING PARTS, BE SURE TO STATE SERIAL NUMBER OF MACHINE

MBH6 TRUCKMOUNT ASSEMBLY

Ref. No.	Part Number	Description	No. Req'd
1	075922	Standard Duty Airlock	1
2	A4064-001	Tarp Kit	1
3	A3585-001	Bumper, Upper	1
4	004720	Bracket, License Plate	1
5	A1198-001	Remote Box	1
6	A2946-001	Cleanout Cover	1
7	A4255-001	Eye Bolt, 3/8-16	2
8	075773	Angle Slide Weldment	2
9	A3274-001	Metering Panel Weldment	1
10	A1096-001	Manual Canister	1
11	053075	Red Cone Assembly	1
12	A3706-001	Mud Flap, Rubber	2
13	A3749-001	Air Hose Assembly	1
14	A3963-001	Bumper, Lower	1
15	A4269-001	Ladder Weldment	1
16	A2758-001	Diesel Fuel Tank Assembly, 27 Gallon	1
	A7293-001	Fuel Tank Cap	1
17	A3044-001	Hopper Cover Plate	1

WHEN ORDERING PARTS, BE SURE TO STATE SERIAL NUMBER OF MACHINE

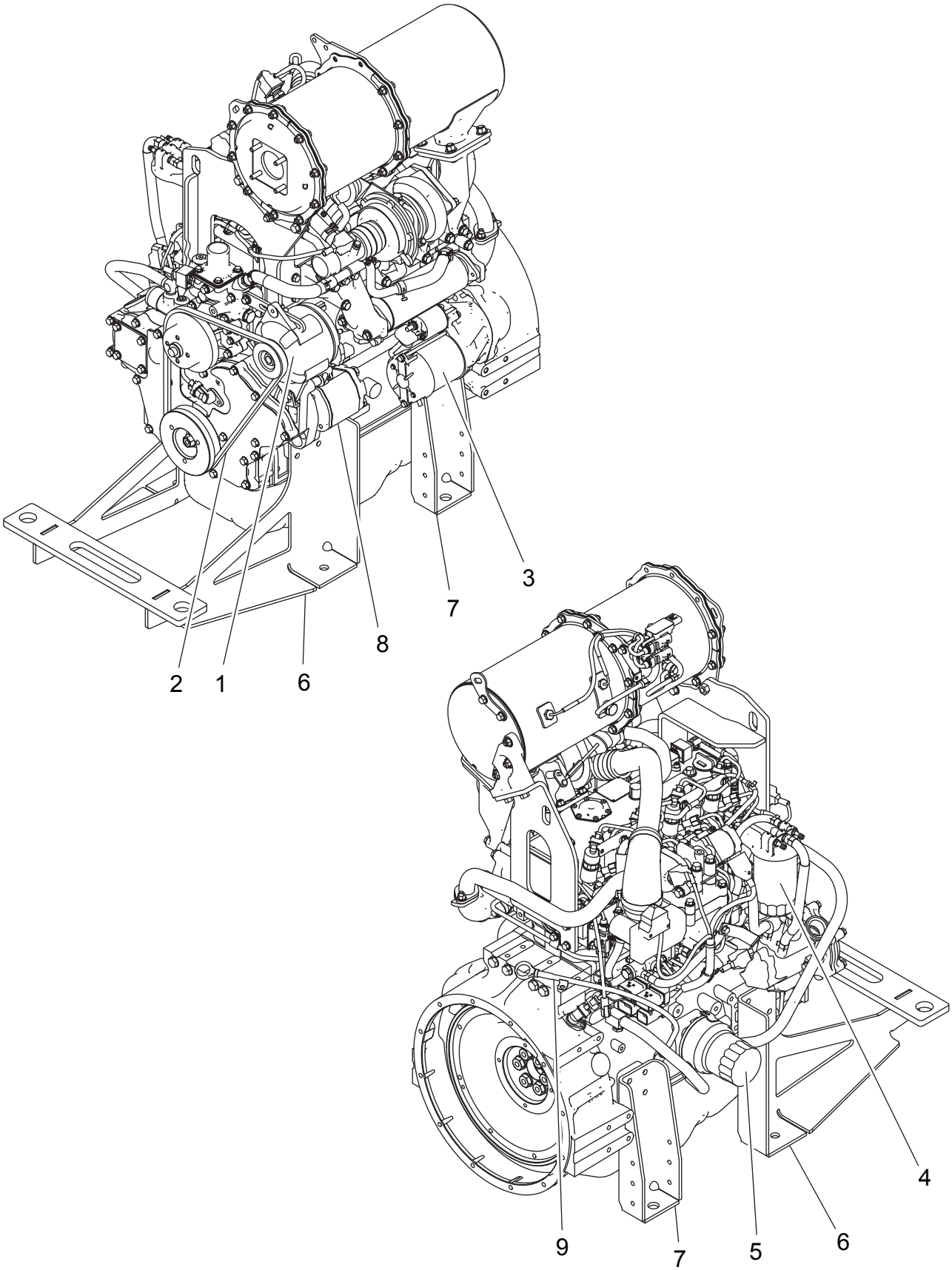

WHEN ORDERING PARTS, BE SURE TO STATE SERIAL NUMBER OF MACHINE

ENGINE

Ref. No.	Part Number	Description	No. Req'd
1	A2161-001	Alternator, 12V 80A	1
2	A2165-001	Fan Belt, 42.5	1
3	A2164-001	Starter Motor, 12V 3.0kW	1
4	031564	Fuel Oil Filter	1
5	031561	Oil Filter	1
6	A2874-001	Weldment, Mount Front	1
7	A3276-001	Weldment, Mount Engine	2
8	075857	Hydraulic Pump	1
9	A4232-001	Dipstick Assembly	1

WHEN ORDERING PARTS, BE SURE TO STATE SERIAL NUMBER OF MACHINE

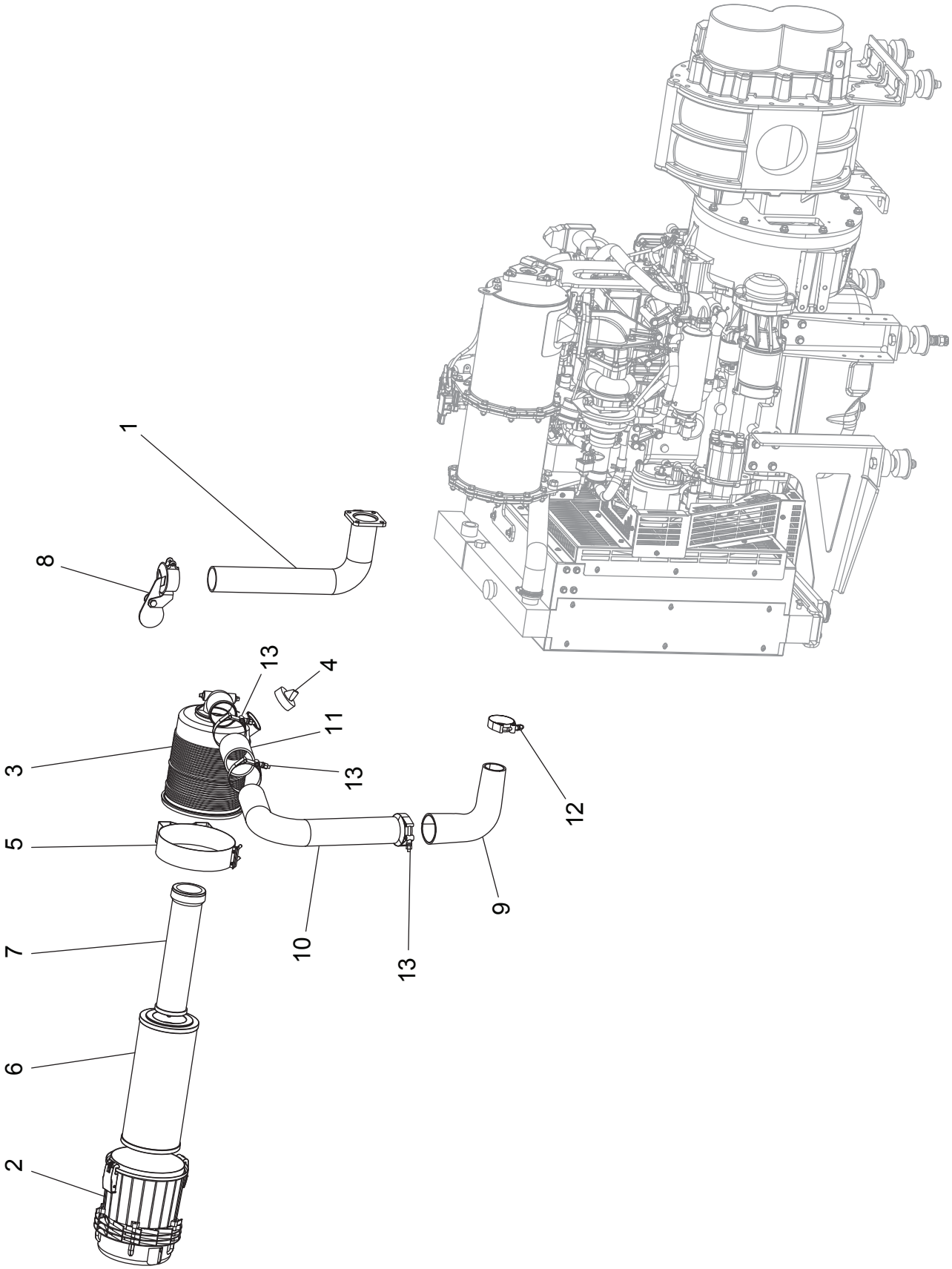

WHEN ORDERING PARTS, BE SURE TO STATE SERIAL NUMBER OF MACHINE

AIR INTAKE AND EXHAUST SYSTEM

Ref. No.	Part Number	Description	No. Req'd
1	A3015-001	Tail Pipe Weldment	1
2	A4345-001	Air Cleaner, 90° Discharge, VLR-2.5	1
3	A4342-001	Air Cleaner Housing, 2.5 #7 VLR	1
4	A4348-001	Evacuator Valve, 2.5 VLR-90	1
5	A4341-001	Aircleaner Bracket Mount,VLR-2.5	1
6	A4343-001	Filter Primary, VLR-2.5	1
7	A4344-001	Filter Secondary, VLR-2.5	1
8	A3157-001	Rain Cap - Exhaust 2.25 in. - 2.5 in. O.D.	1
9	A2982-001	90° Elbow, 2.5 x 1.75 in.	1
10	A2984-001	Air Intake Pipe	1
11	A4317-001	Straight Coupler Hose, 2.5 x 4 in.	1
12	A0959-009	Clamp, T-Bolt Band, 2.38 in. Nom. Dia.	1
13	A0959-015	Clamp, T-Bolt Band, 3 in. Nom. Dia.	3

WHEN ORDERING PARTS, BE SURE TO STATE SERIAL NUMBER OF MACHINE

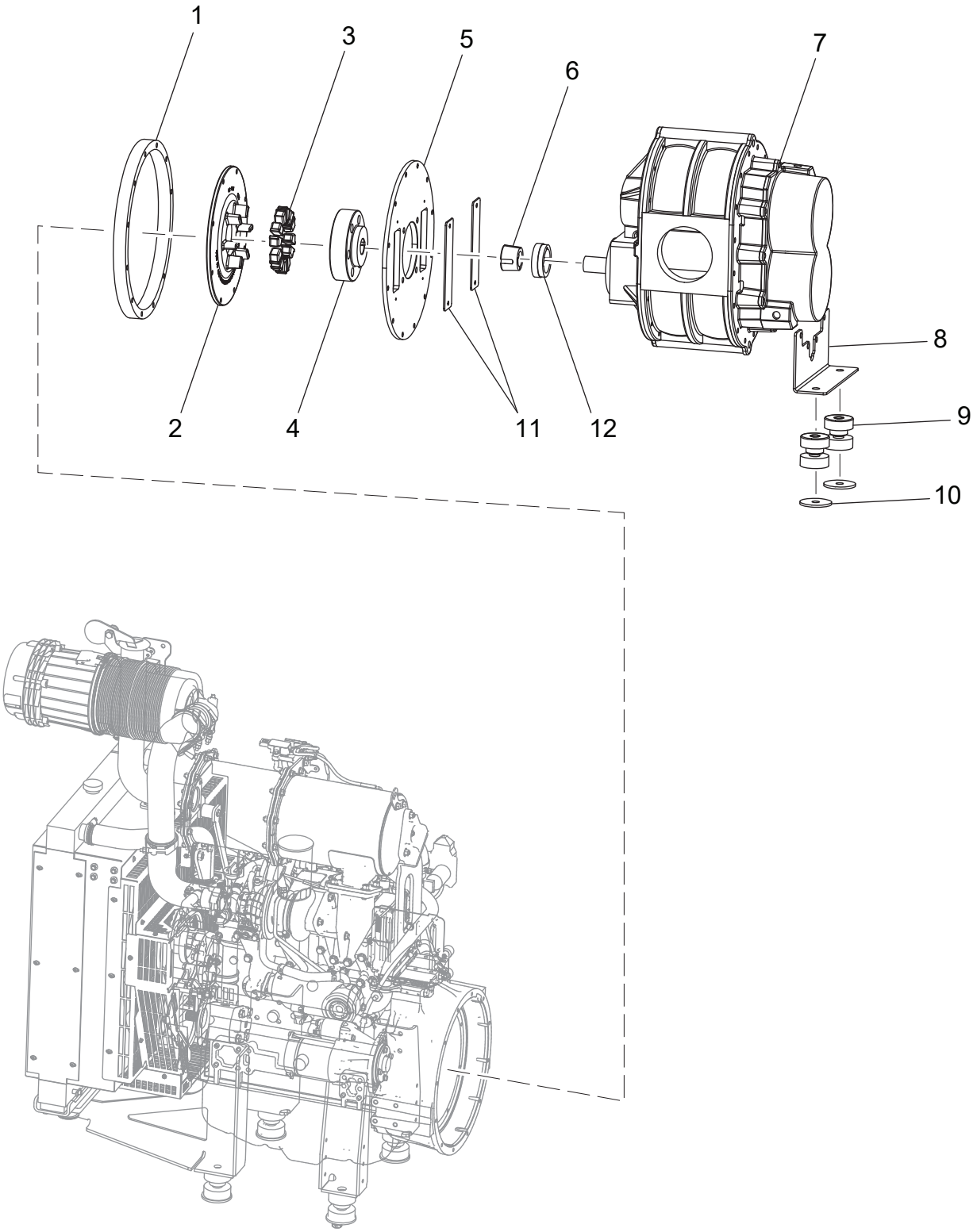

WHEN ORDERING PARTS, BE SURE TO STATE SERIAL NUMBER OF MACHINE

ENGINE TO BLOWER COUPLING

Ref. No.	Part Number	Description	No. Req'd
1	008811	Adapter Ring	1
2	A2710-001	Forward Coupling	1
3	A4347-001	FH Coupling Rubber Insert	12
4	A2708-001	Coupling Hub	1
5	A3824-001	Mounting Plate, SAE 4 x SAE C	1
6	A4787-001	Taper Hub	1
7	075290	Blower with Flywheel Adapter	1
8	A3582-001	Blower Mount	1
9	A4013-001	Vibration Isolator	6
10	005861	Snubbing Washer	6
11	A4788-001	Cover Plate	2
12	A4786-001	Split Lock Taper Bushing	1

WHEN ORDERING PARTS, BE SURE TO STATE SERIAL NUMBER OF MACHINE

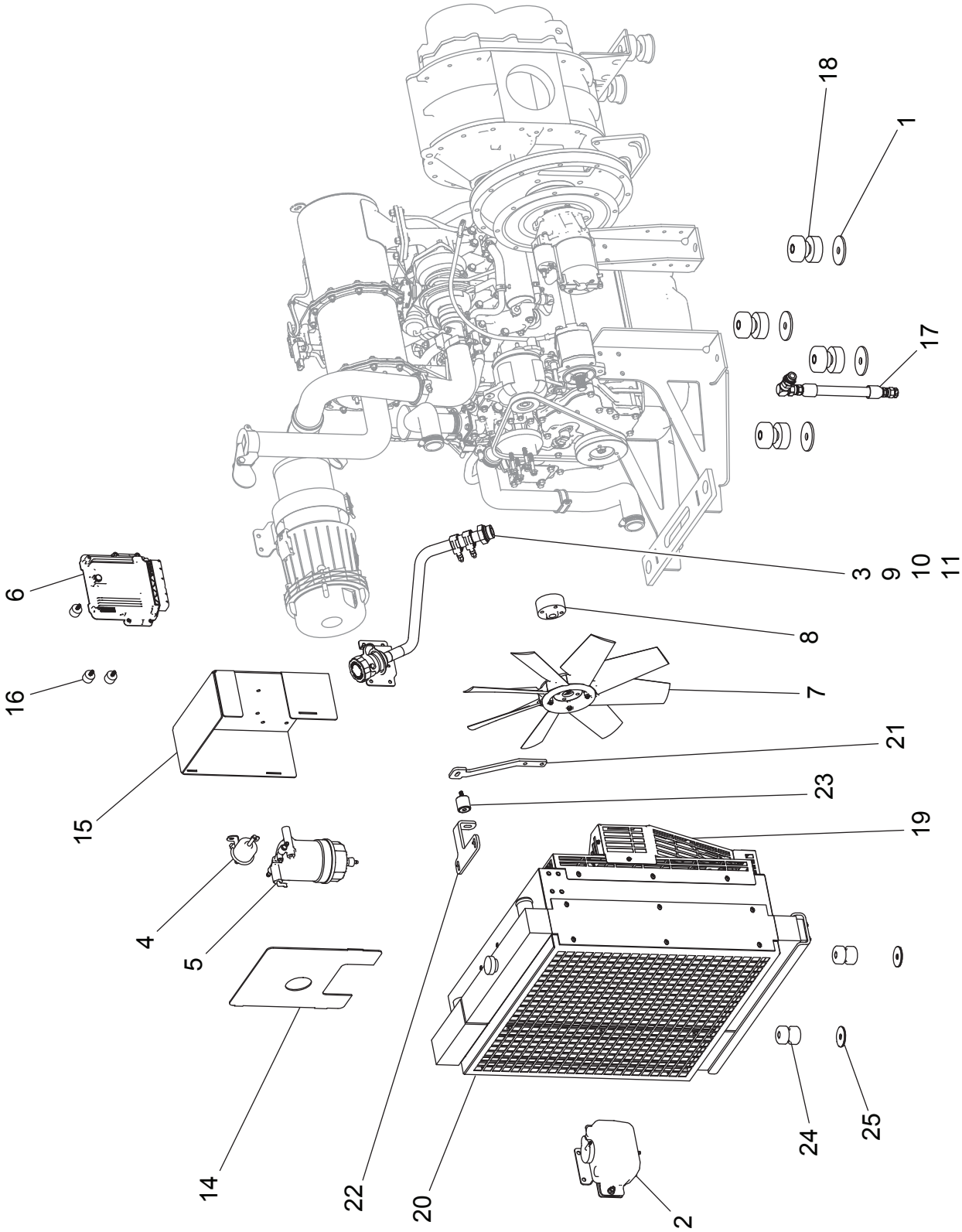

WHEN ORDERING PARTS, BE SURE TO STATE SERIAL NUMBER OF MACHINE

RADIATOR ASSEMBLY

Ref. No.	Part Number	Description	No. Req'd
1	005861	Zinc Plated Steel Snubbing Washer	6
2	031542	1 Qt. Overflow Bottle Assembly	1
3	A0959-002	Clamp, T-Bolt Band, 1.5 in. Nom. Dia.	2
4	031521	Pump Assembly, Fuel Feed	1
5	031522-00	Fuel Water Separator	1
6	A2160-001	Engine ECU	1
7	A2796-001	Radiator Fan	1
8	A2871-001	Fan Standoff Hub	1
9	A2639-024	Adapter Fitting, M33 ORS x 1 in. I.D. Hose	1
10	A2895-001	Oil Hose, SAE100R1, 1 in. I.D.	1
11	A3295-001	Oil Fill Port - Extension Assembly	1
12	A3582-001	Blower Mount	1
13	075290	Blower with Flywheel Adapter	1
14	A4877-001	Filter Mount Cover	1
15	A4878-001	Filter Mount Weldment	1
16	A3968-001	Isolator Stud, 1/4-20	4
17	A3997-001	Remote Oil Drain Hose Assembly	1
18	A4013-001	Vibration Isolator	6
19	A3103-001	Belt Guard	1
20	A3100-001	Radiator Core	1
21	A3110-001	Isolator Mount Bracket	1
22	A3109-001	Radiator Bracket	1
23	031538	Radiator Mount Isolator, Upper	1
24	031539	Radiator Mount Isolator, Lower	2
25	031537	Plain Washer, 0.500 x 2.00 x 0.125	2
NOT SHOWN			
	A3397-001	Vinyl-Coated Steel Spring Clip	1

WHEN ORDERING PARTS, BE SURE TO STATE SERIAL NUMBER OF MACHINE

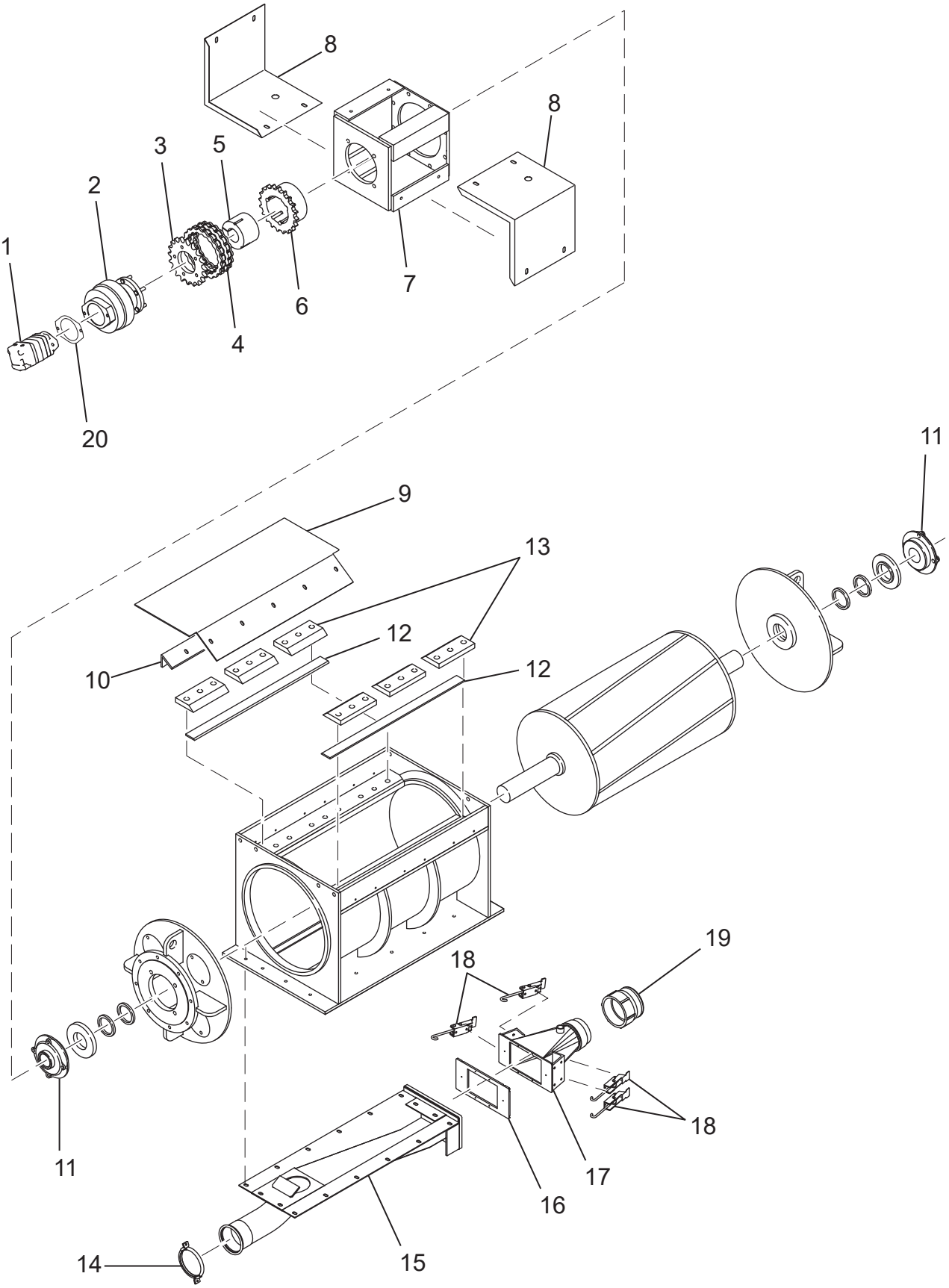

WHEN ORDERING PARTS, BE SURE TO STATE SERIAL NUMBER OF MACHINE

AIRLOCK ASSEMBLY

Ref. No.	Kit Ref.	Part Number	Description	No. Req'd
1	▲	075230-01	Hydraulic Motor	1
2	▲	075204	Airlock Gearbox	1
3	▲	075207	Sprocket	1
4	▲	045201	Chain-Chain Couplings	1
5	▲	075216	Bushing	1
6	▲	045199	Coupling, Chain, Taper-Lock	1
7	▲	075210	Airlock Guard Assembly	1
8	▲	F605-0021	Cover Guard	2
9	▲	F705-0034	Airlock Filler Cover	1
10	▲	F605-0131	Airlock Filler Support	1
11	▲	075239	Airlock Flange Bearing	2
12	▲	075926	Knife, 16 x 25 Airlock	2
13	▲	075927	Knife Clamp, 16 x 25 Airlock	8
14	▲	052737	4 in. Bolted Pull Ring	1
15	▲	A2745-001	Discharge Bottom Pan Weldment	1
16	▲	075611	Discharge Gasket	1
17	▲	075740	Transition Assembly Weldment, 4 in.	1
		-- OR --		
	▲	A2249-001	Transition Assembly Weldment, 5 in.	1
18	▲	075224	Overcenter Draw Latch	4
19	▲	055374	4 in. Male Nyglass Adapter	1
		-- OR --		
	▲	012306	5 in. Male Aluminum Adapter	1
20	▲	055517	Paper Gasket	1
NOT SHOWN				
	▲	075762-02	Airlock Right Hand Bracket	2
	▲	075762-01	Airlock Left Hand Bracket	2
		012520	Brass Bulkhead Fitting	1
		007705	Grease Fitting	1
		●	Lincoln Lube 90º Swivel Fitting	2
		●	Lincoln Lube Grey Grease Line 7 in. Long	1
		●	1/2 in. NPT Pipe Plug	1
		●	1/4 in. NPT Plug	1
KITS AND MARKERS				
	▲	A2567-001	Air Lock Assembly	
	●	Standard Hardware Item		

WHEN ORDERING PARTS, BE SURE TO STATE SERIAL NUMBER OF MACHINE

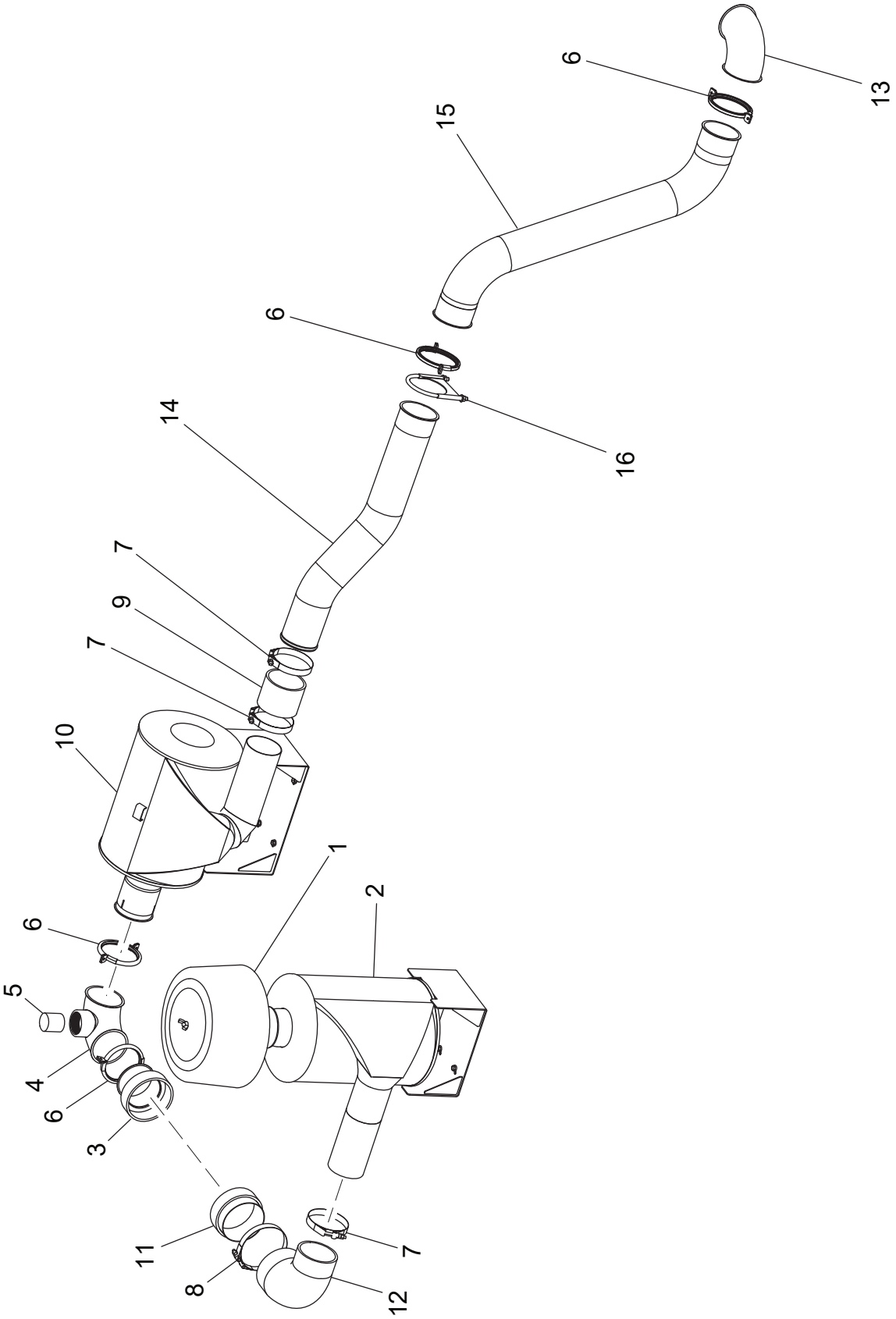

WHEN ORDERING PARTS, BE SURE TO STATE SERIAL NUMBER OF MACHINE

BLOWER AND AIR PIPING SYSTEM

Ref. No.	Part Number	Description	No. Req'd
1	055144	Inlet Filter	1
	055145	Filter Element	1
2	A3301-001	Radial Silencer Weldment	1
3	A2775-001	Pipe Weldment	1
4	A2776-001	Pipe - Elbow, Blower Discharge	1
5	075929	Relief Valve	1
6	052737	4 in. Bolted Pull Ring	5
7	055335	Clamp, T-Bolt Band, 4.5 in. Nom. Dia.	3
8	052011	Clamp, T-Bolt Band, 5.5 in. Nom. Dia.	1
9	A3016-003	Straight Sleeve, EPDM, 4 in. I.D.	1
10	A3200-001	Silencer Assembly	1
11	075295-02	Blower Inlet Nipple	1
12	052010	Hose - Elbow 90°, Reducer, Rubber	1
13	A3316-040	4 in. 90° Jacobs Elbow, R=1D, 19 Ga.	1
14	A4673-001	Upper Tube Weldment	1
15	A4688-001	Lower Tube Weldment	1
16	055336	Clamp, T-Bolt Band, 4.0 in. Nom. Dia.	3

WHEN ORDERING PARTS, BE SURE TO STATE SERIAL NUMBER OF MACHINE

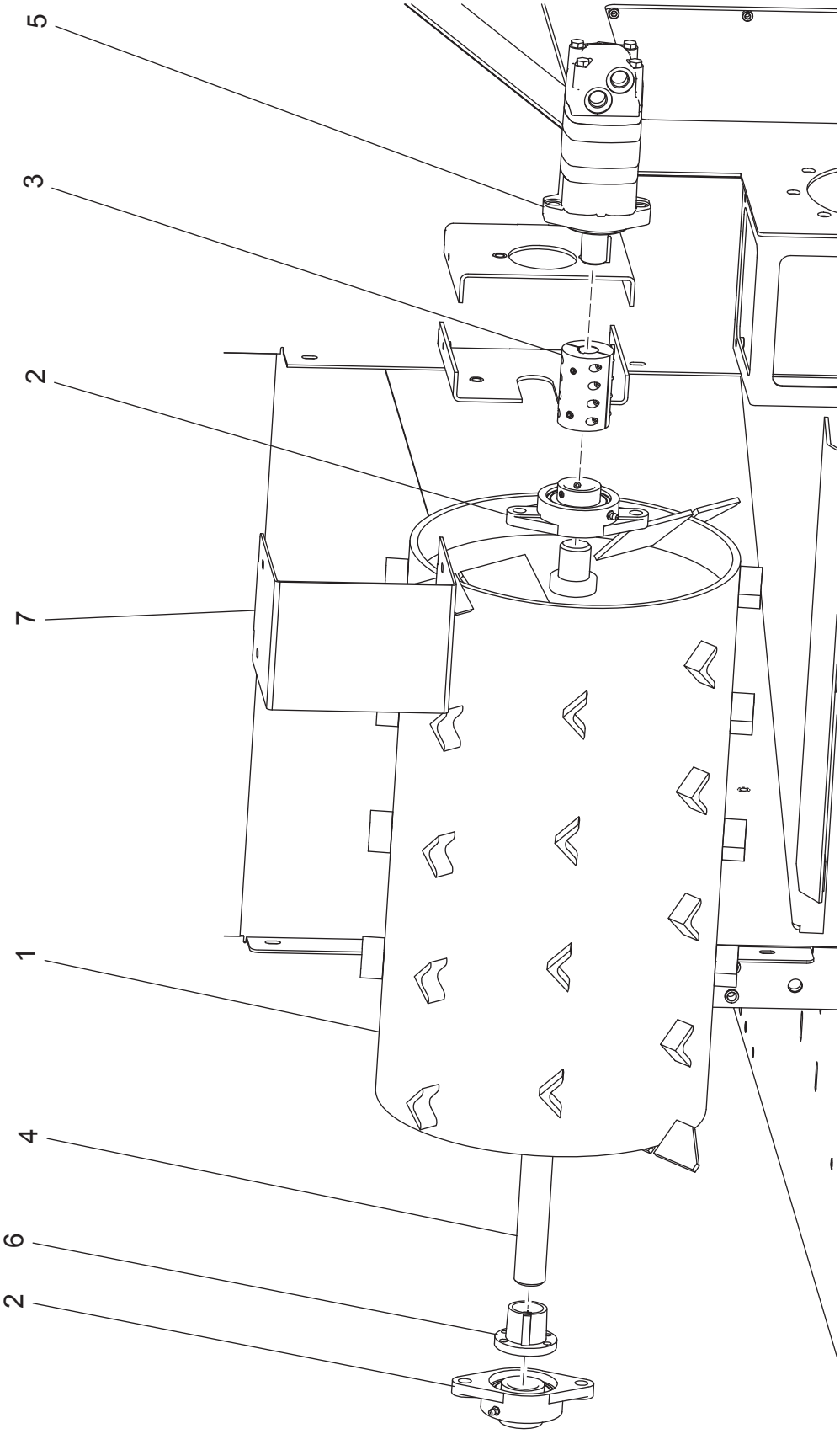

WHEN ORDERING PARTS, BE SURE TO STATE SERIAL NUMBER OF MACHINE

FEED ROLL ASSEMBLY

Ref. No.	Part Number	Description	No. Req'd
1	075833	Feed Roll	1
2	075824	1-1/2 in. Two Bolt Flange Bearing	2
3	080523	Shaft Coupling, 2 Piece, 1.5 in. x 1 in.	1
4	A2841-001	1-1/2 in. TG&P 1045 Shaft x 42 in. Lg.	1
5	052391	Hydraulic Motor	1
6	004635	Split Taper Bushing, 1-1/2 in. Bore	1
7	A2850-001	Bearing Cover	1

WHEN ORDERING PARTS, BE SURE TO STATE SERIAL NUMBER OF MACHINE

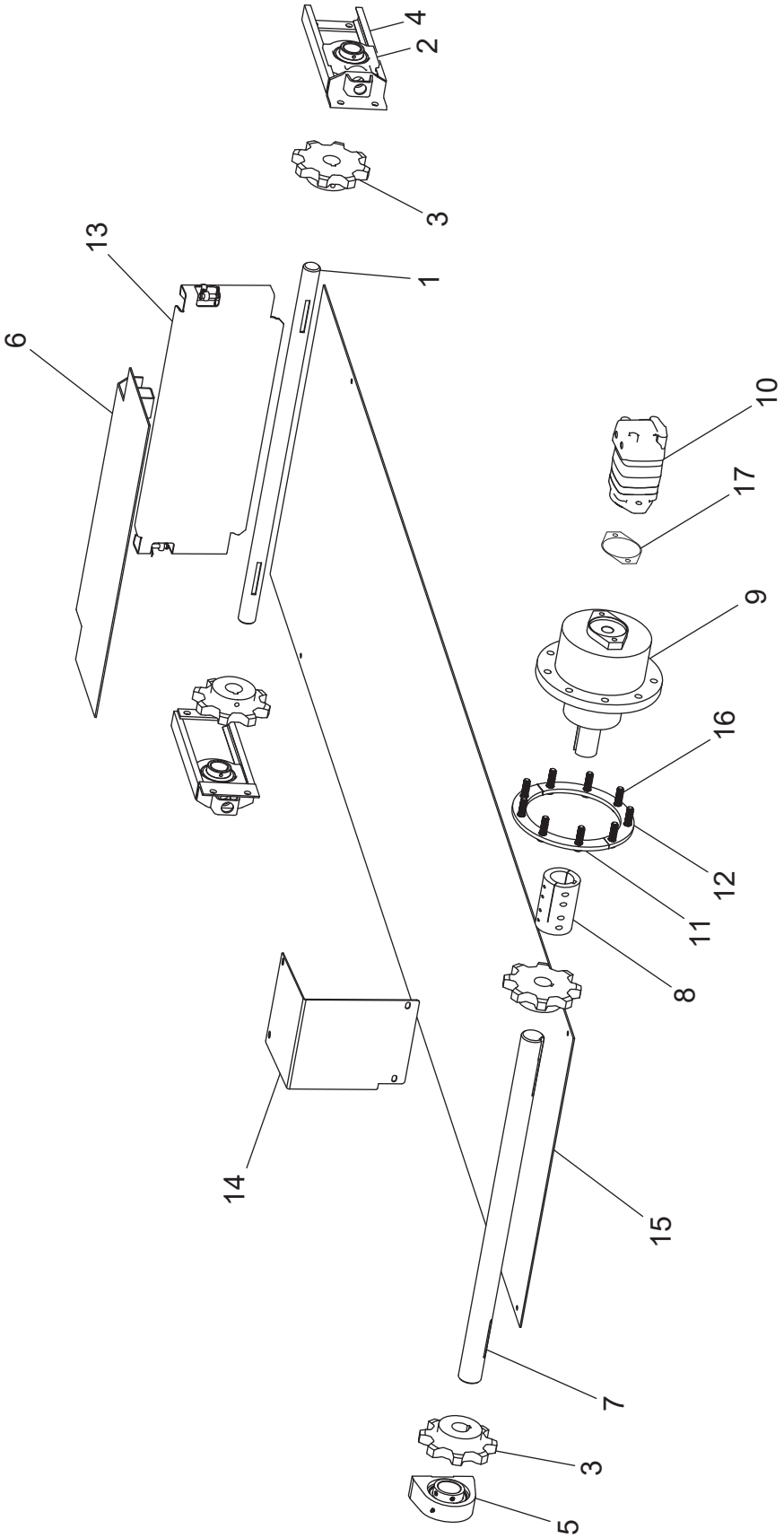

WHEN ORDERING PARTS, BE SURE TO STATE SERIAL NUMBER OF MACHINE

FLOOR ASSEMBLY

Ref. No.	Part Number	Description	No. Req'd
1	075215-02	Floor Idler Shaft	1
2	A7222-001	Floor Take-Up Bearing	2
3	075218	Live Floor Sprocket - (8-Tooth) 1-1/2 in. Bore	4
4	A7221-001	Take-Up Center Pull, 6 in. Frame	2
5	075606	Bearing	1
6	075285	Front Chain Guard Weldment	1
7	A2755-001	Floor Drive Shaft	1
8	053023	2 Piece Coupling, 2 in. x 2 in. I.D., Steel	1
9	052989	Floor Gearbox	1
10	075230-01	Hydraulic Motor	1
11	A3092-001	Mount Planetary Assembly,Part B	1
12	A3221-001	Mount Planetary Assembly, Part A	1
13	A2946-001	Clean-out Cover	1
14	A3070-001	Planetary Cover	1
15	A3438-001	Floor Pan	1
16	A0161-001	Wheel Stud	9
17	055517	Paper Gasket	1
NOT SHOWN			
	075583	Floor Chain	1

WHEN ORDERING PARTS, BE SURE TO STATE SERIAL NUMBER OF MACHINE

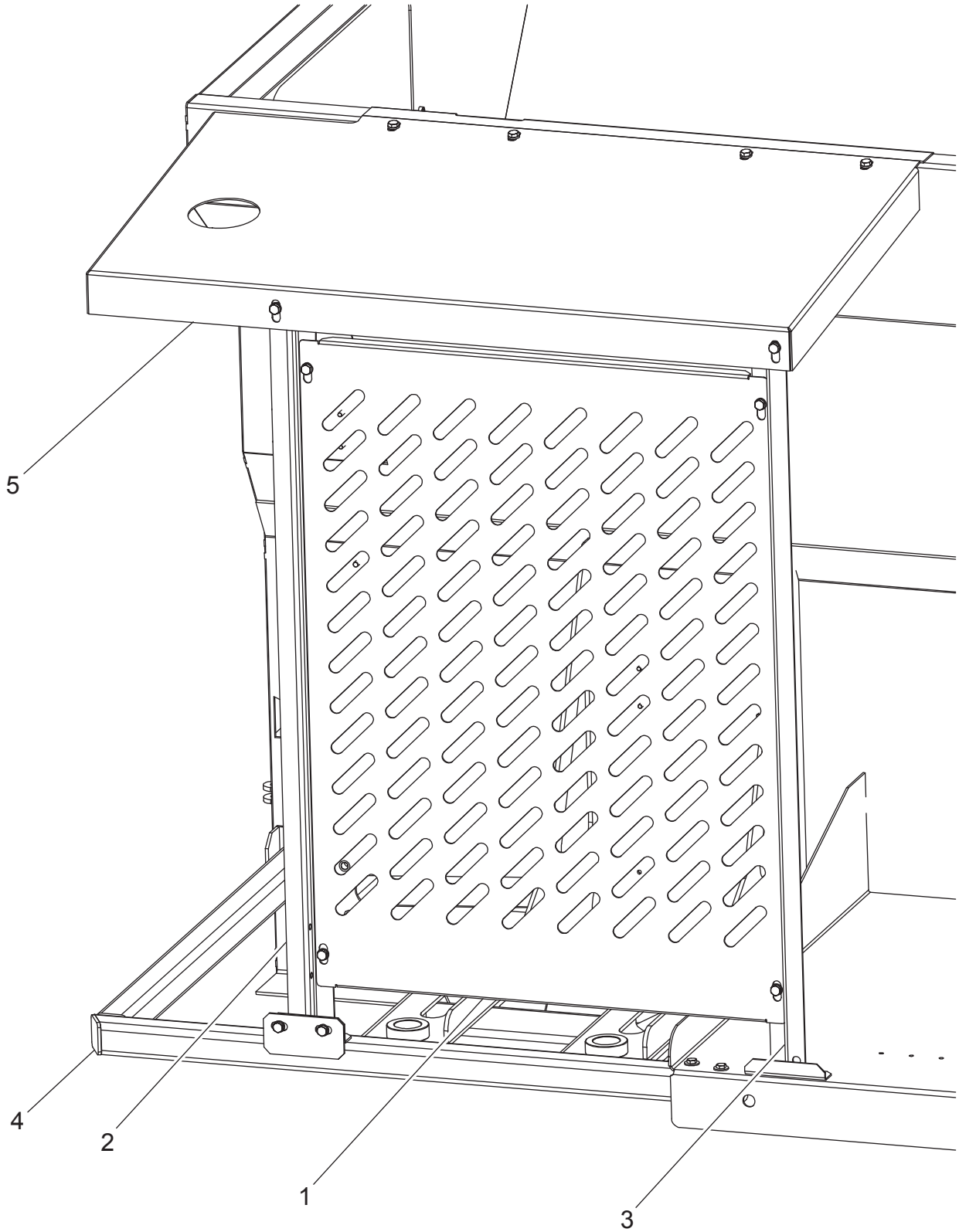

WHEN ORDERING PARTS, BE SURE TO STATE SERIAL NUMBER OF MACHINE

CANOPY ASSEMBLY

Ref. No.	Part Number	Description	No. Req'd
1	A3039-001	Canopy Front Cover Guard	1
2	A3033-001	Bracket - Guard, Weldment	1
3	A3036-001	Bracket - Guard, Weldment	1
4	A2952-001	Side Bumper Weldment	1
5	A2900-001	Canopy Cover	1

WHEN ORDERING PARTS, BE SURE TO STATE SERIAL NUMBER OF MACHINE

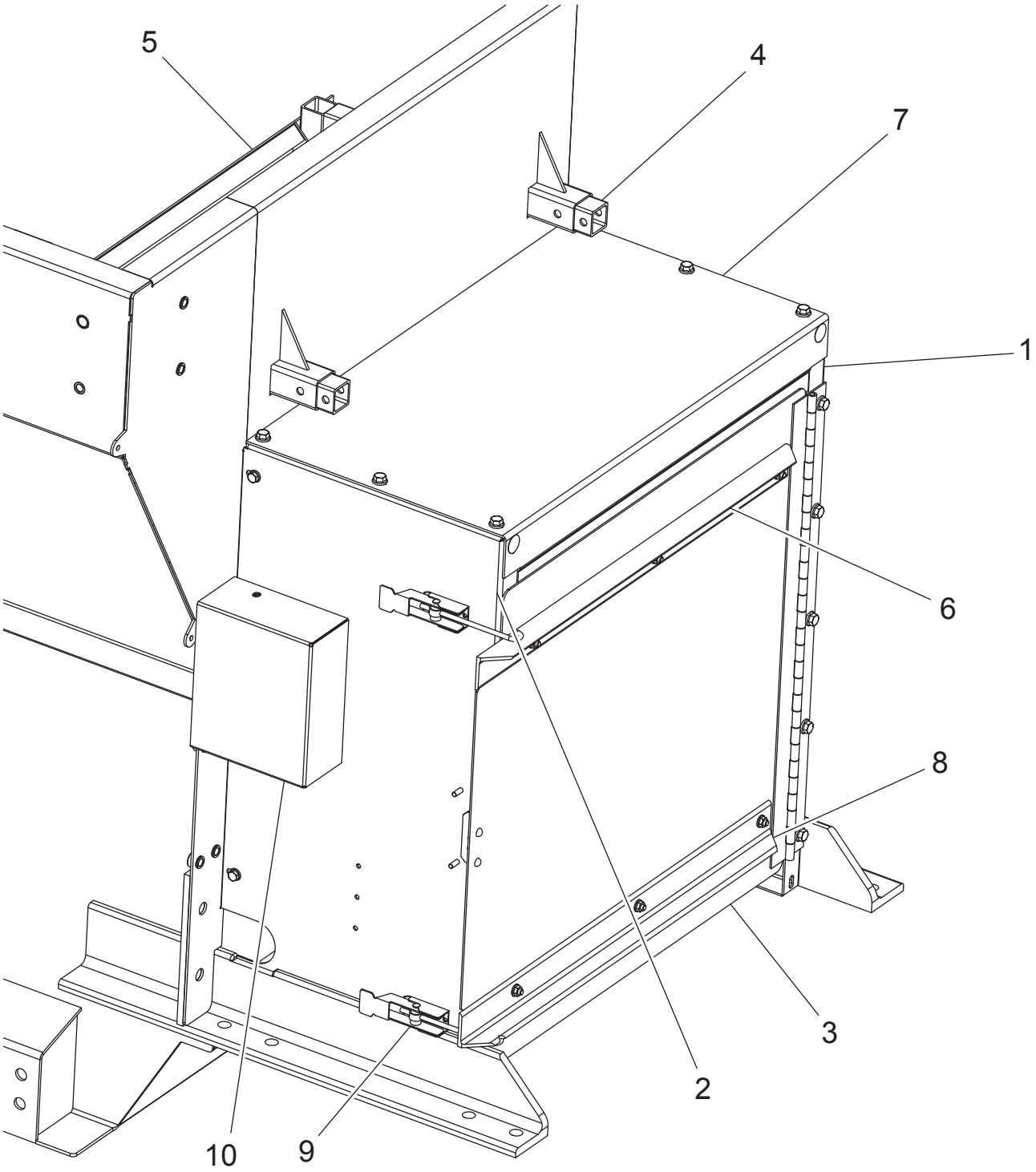

WHEN ORDERING PARTS, BE SURE TO STATE SERIAL NUMBER OF MACHINE

METERING DOOR ASSEMBLY

Ref. No.	Part Number	Description	No. Req'd
1	A3557-001	Metering Door Panel Weldment, Side B	1
2	A3245-001	Metering Door Panel Weldment, Side A	1
3	A3064-001	Metering Door Weldment	1
4	075773	Angle Slide Weldment	2
5	A3274-001	Weldment, Metering Panel	1
6	A3065-001	Door Support Angle, Top	1
7	F605-0110	Top Cover	1
8	A3066-001	Door Support Angle, Bottom	1
9	075224	Over-Center Draw Latch	2
10	A4000-001	Air Silencer Base Mount	1

WHEN ORDERING PARTS, BE SURE TO STATE SERIAL NUMBER OF MACHINE

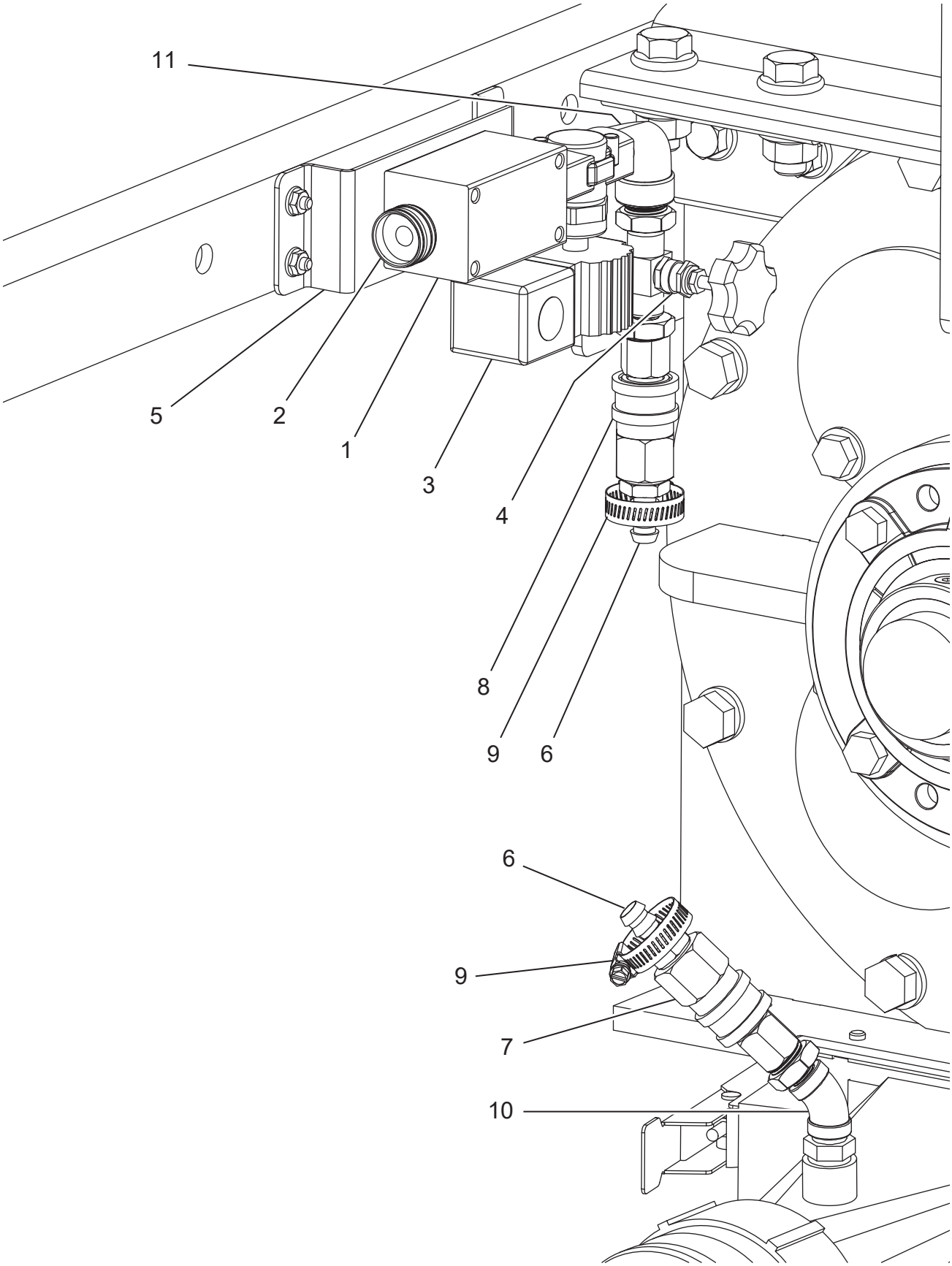

WHEN ORDERING PARTS, BE SURE TO STATE SERIAL NUMBER OF MACHINE

DUST SUPPRESSION SYSTEM

Ref. No.	Part Number	Description	No. Req'd
1	A3091-001	Dust Suppression Manifold Adapter	1
2	A4396-001	Garden Hose Fitting, Female	1
3	371801	Dema Water Valve with Actuator	1
4	052941	1/4 in. Brass Needle Valve	1
5	A3583-001	Dust Suppression Mount Weldment	1
6	006772	Hose Barb	2
7	052734	Female Disconnect	1
8	371044-03	1/2 in. NPT Coupling	1
9	A2182-004	Hose Clamp, Worm Gear, SAE J1508 Type F, Size 16	2
10	A5055-001	Elbow, 45 degree, SS, F - F, 1/4 NPT - 1/4 NPT	1
11	A5750-001	Elbow, 90 degree	1
NOT SHOWN			
	052481	Nozzle	1
	190030	Water Hose	1
	FW71746	Liquid Tight Fitting, Connected to Water Valve	1
	052735	Male Disconnect	2

WHEN ORDERING PARTS, BE SURE TO STATE SERIAL NUMBER OF MACHINE

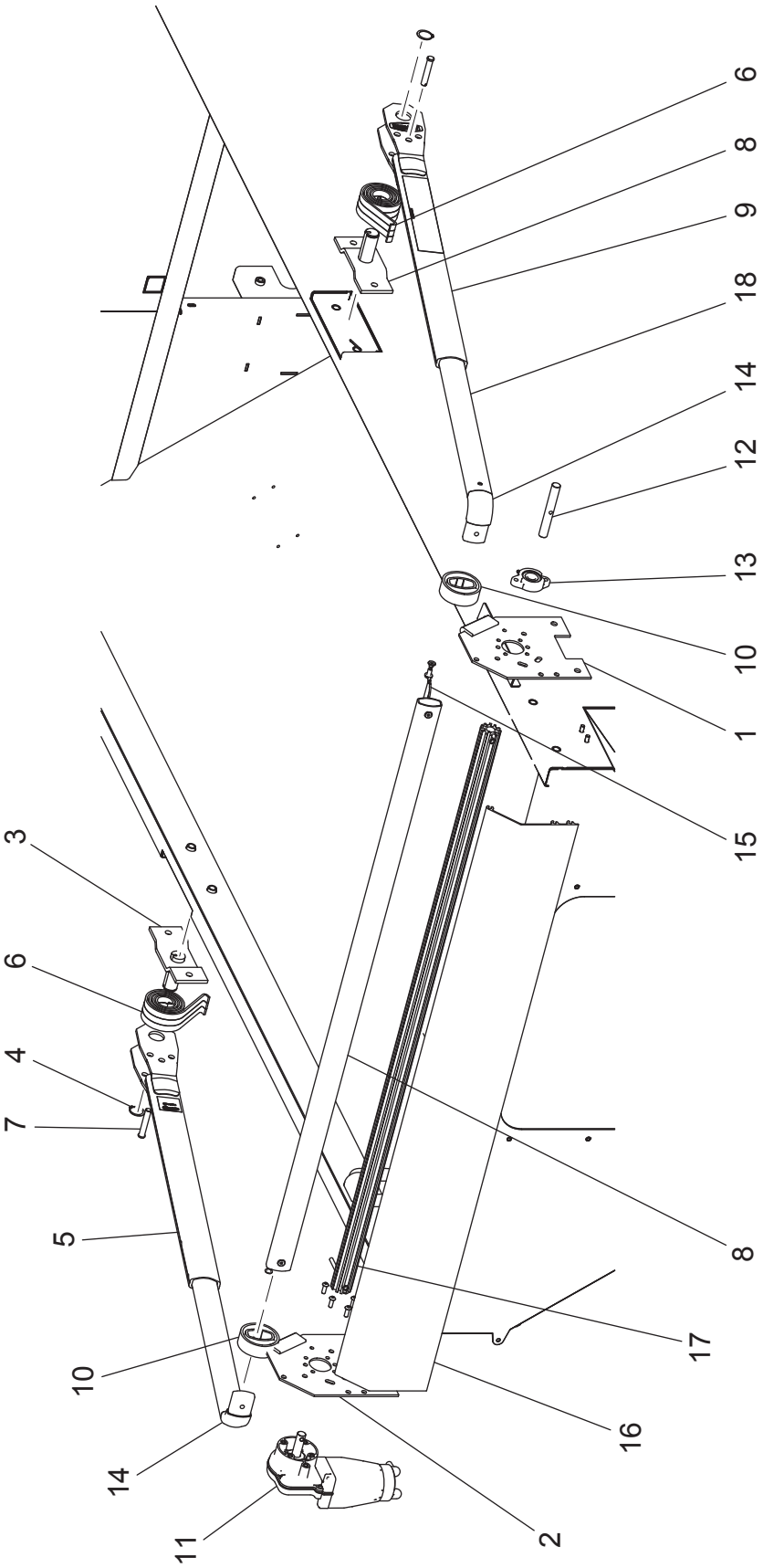

WHEN ORDERING PARTS, BE SURE TO STATE SERIAL NUMBER OF MACHINE

TARP ASSEMBLY

Ref. No.	Kit Ref.	Part Number	Description	No. Req'd
1	▲	A2739-001	Tarp Mounting Bracket - Driver Side	1
2	▲	A2738-001	Tarp Mounting Bracket - Passenger Side	1
3	▲	A2692-001	Pivot Pin, 3-Spring	2
4	▲	A2701-001	Snap Ring, 1 1/4 in. External	2
5	▲	A2693-001	Pivot Tube	1
6	▲	A2694-001	Spring, Spiral Torsion Spring 1-1/4	6
7	▲	A2695-001	Clevis Pin, 1/2 in. X 2-3/4 in.	2
8	▲	A2707-001	Bow Tube	1
9	▲	A2693-001	Pivot Tube	1
10	▲	A2715-001	Tarp Bow Bumper	2
11	▲	A2716-001	Gear Motor, Tarp	1
12	▲	A2748-001	Stub Shaft, 3/4 in. X 5-1/2 in. Axle	1
13	▲	A2751-001	Bearing, 3/4 in. Flanged Axle Bearing with Bolts/Nuts	1
14	▲	A2702-001	Aluminum Corner - 90 Degree	2
15	▲	A2705-001	Tether Cable With Install Label For 90º Corner	2
16	▲	A2743-001	Wind Deflector	1
17	▲	A2749-001	Axle, Pre-Threaded Tarp Axle	1
18	▲	A2714-001	Tube Arm	2
NOT SHOWN				
		A2750-001	Tarp, Knit Mesh, 54 in. x 128 in.	
KITS AND MARKERS				
	▲	A2569-001	Full Tarp Assembly	

WHEN ORDERING PARTS, BE SURE TO STATE SERIAL NUMBER OF MACHINE

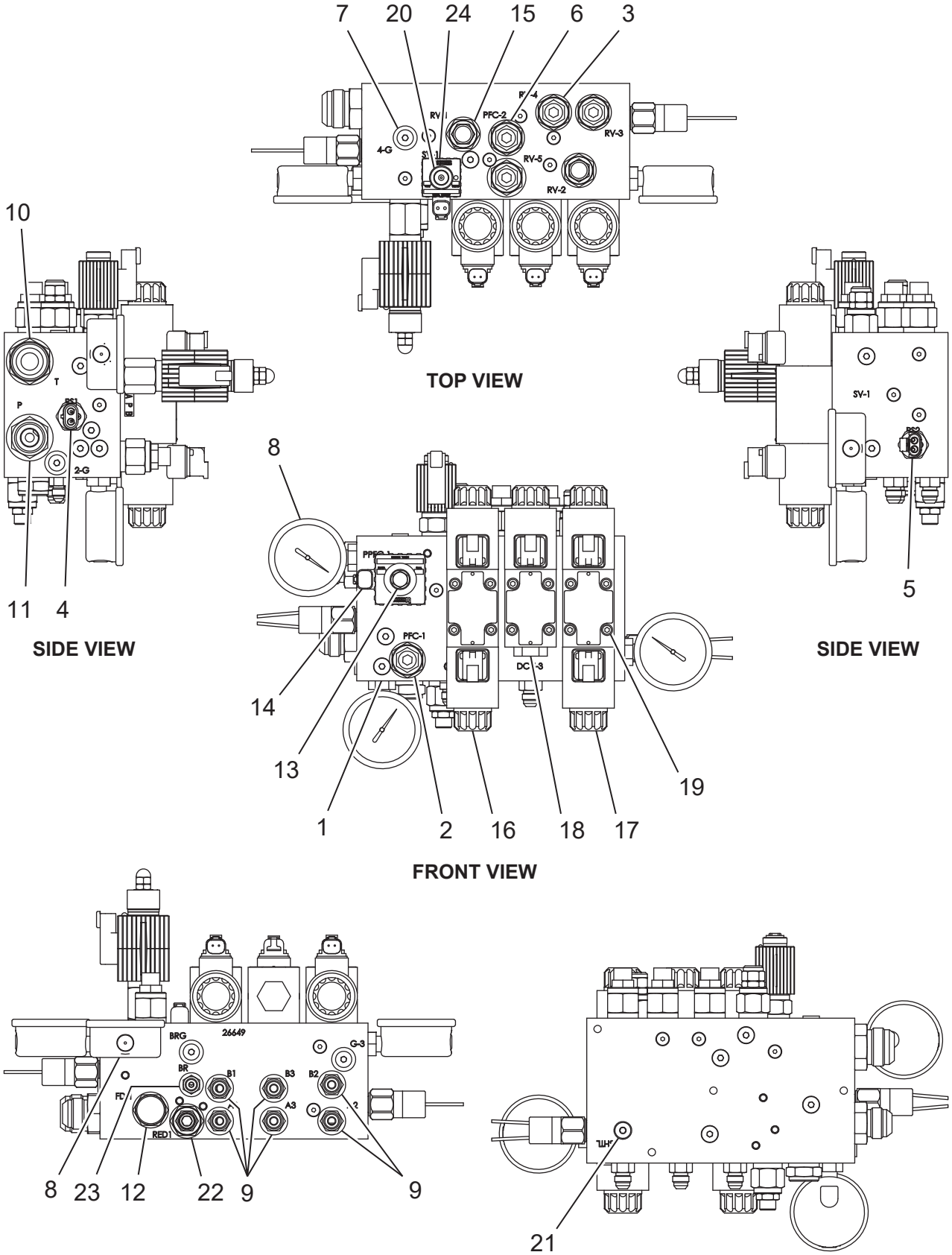

TOP VIEW

SIDE VIEW

SIDE VIEW

FRONT VIEW

BOTTTOM VIEW

BACK VIEW

WHEN ORDERING PARTS, BE SURE TO STATE SERIAL NUMBER OF MACHINE

HYDRAULIC MANIFOLD

Ref. No.	Kit Ref.	Part Number	Description	No. Req'd
1	■	A6206-001	Hydraulic Manifold, MBH6, Relief	1
2	■	075902-08	FC Valve Cartridge, PC, Priority Type, 8 GPM, SAE 10	1
3	■	075902-09	Relief Valve Cartridge, 26 GPM, SAE 10, 50-3000 psi	3
4	■	A5989-001	Pressure Switch, 850 psi, 1/4 NPT, NO	1
5	■	052336	Pressure Switch, 2400 psi, 1/4 NPT, NO	1
6	■	075902-10	FC Valve Cartridge, PC, Priority Type, 2 GPM, SAE 10	1
7	■	075924	#4 SAE Socket HD Plug	4
8	■	A1374-001	Pressure Gauge, 0-5000 psi	3
9	■	055601	Adapter Fitting, #6 MJIC x #6 SAE ORB	6
10	■	FW65225	Straight Thread Male Connector, SAE	1
11	■	012087	3/4 in. Flare Tube End x 1-1/16 in. - 12 SAE Male Flare Connector	1
12	■	075902-02	Flow Divider/Combiner Cartridge, 50/50, 12 GPM	1
13	■	075902-03	PFC Valve Cartridge, NO, 8 GPM, SAE 10 without Coil	1
14	■	055863	Solenoid, Type "L", Deutsch DT04-2P	1
15	■	075902-04	Relief Valve Cartridge, 15 GPM, SAE 8, 50-3000 PSI	2
16	■	075902-05	DC Valve, 4-Way, 3-Position, 21.1 GPM, D03 with Coils	1
17	■	075902-06	DC Valve, 4-Way, 3-Position, 21.1 GPM, D03 with Coils	1
18	■	075902-07	DC Valve, 4-Way, 2-Position, 21.1 GPM, D03 with Coils	1
19	■	----------	10-24 UNC x 1-3/4 Hexagon Socket Head Cap Screw	12
20	■	A4327-001	DC Valve Cartridge, 3-Way, 2-Position, 5 GPM, SAE 08, No Coil	1
21	■	A6249-001	Shuttle Valve, 2 Position, 3 WAY, 1.5 GPM, SAE 04	1
22	■	A5766-001	Pressure Reducing Valve, Pilot Operated, 50-1500 psi, SAE 08	1
23	■	055308	1/4 in. Flare Tube End x 1/4 in. MNPT Male Connector	1
24	■	055861	Solenoid, Type "S", Deutsch DT04-2P	1
KITS AND MARKERS				
	■	A6205-001	Reliefs Hydraulic Manifold Assembly	

WHEN ORDERING PARTS, BE SURE TO STATE SERIAL NUMBER OF MACHINE

PRESSURE REDUCING KIT - HOSE REEL

Ref. No.	Kit Ref.	Part Number	Description	No. Req'd
1	▲	A5765-001	Manifold, Inline, PRRS-08-N-S-06TA	1
2	▲	A5768-001	Hydraulic Hose, Inline 2, #4	1
3	▲	A5768-002	Hydraulic Hose, Inline 3, #4	1
4	▲	●	1/4-20 UNC x 1.75 Hex Flange Screw - Regular Thread	2
5	▲	●	1/4-20 Hex Flange Nut	2
6	▲	----------	Fitting, #04 MJIC x #8 MNPT, 90° Elbow	1

KITS AND MARKERS

▲	A5767-001	MBH Hose Reel Pressure Reducing Kit
●	Standard Hardware Item - Available at your local hardware store.	

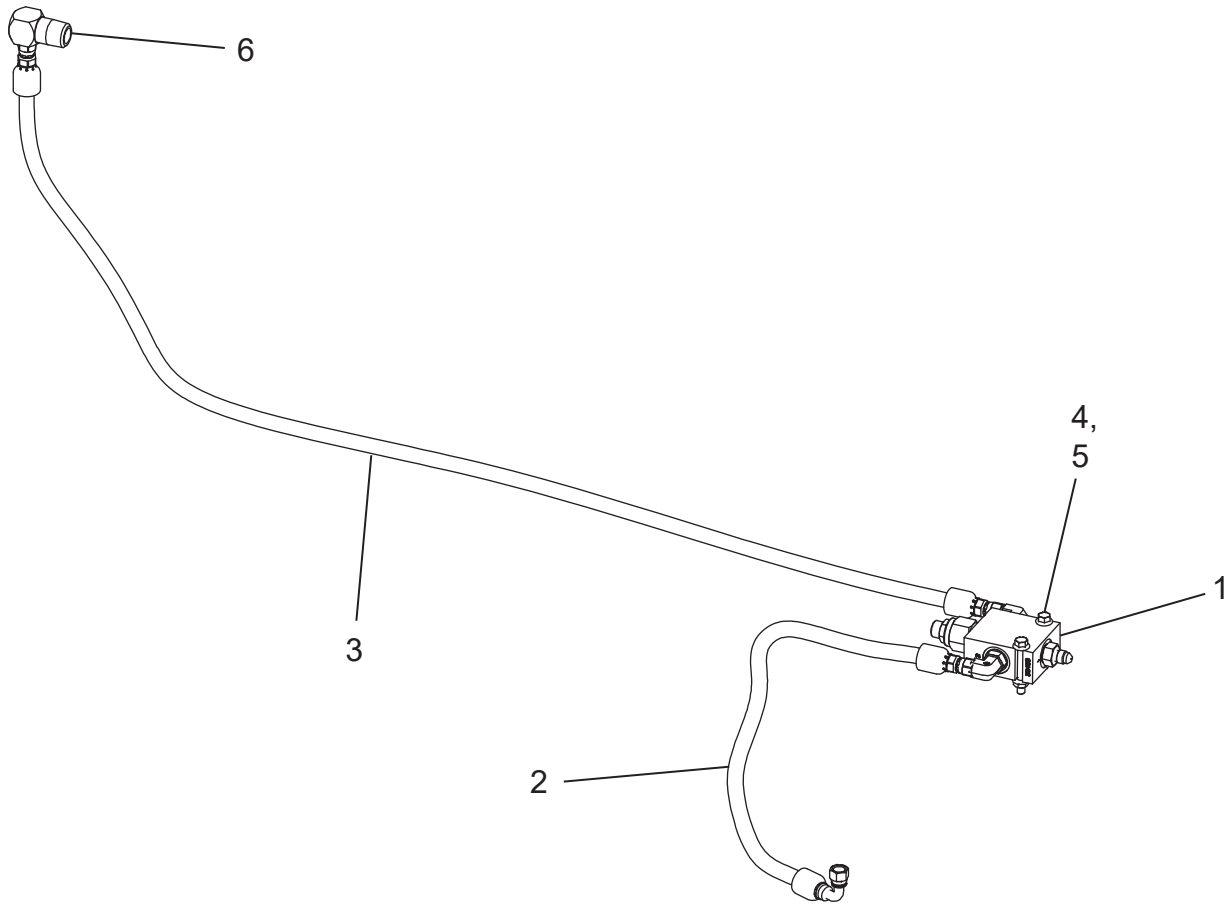

NOTE: ***This component is used with the Hydraulic Manifold on units with Serial Numbers OS-0001 to OS-0030.***

WHEN ORDERING PARTS, BE SURE TO STATE SERIAL NUMBER OF MACHINE

THIS PAGE LEFT BLANK INTENTIONALLY

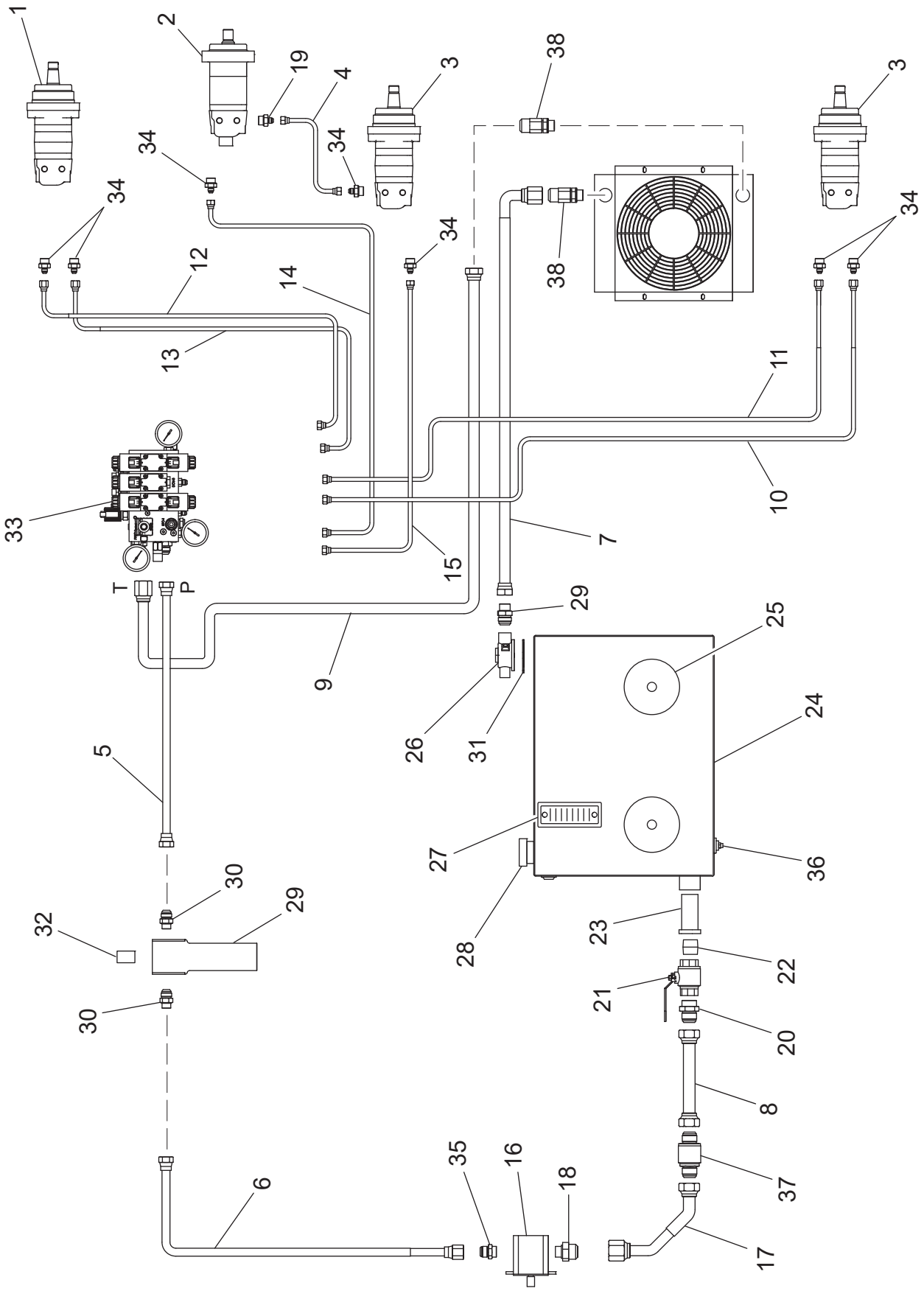

WHEN ORDERING PARTS, BE SURE TO STATE SERIAL NUMBER OF MACHINE

HYDRAULIC SYSTEM

Ref. No.	Kit Ref.	Part Number	Description	No. Req'd
1		071238	Hose Reel Motor	1
2		052391	Pick Wheel Motor	1
3		075230	Floor Motor/Airlock Motor	2
4	▲	A3158-002	Hydraulic Hose, Feed Wheel Floor	1
5	▲	A3158-004	Hydraulic Hose, Man. Pump-Filter	1
6	▲	A3158-005	Hydraulic Hose, Pump-Filter	1
7	▲	A3158-006	Hydraulic Hose, Cooler Out-Tank	1
8	▲	A3158-007	Hydraulic Hose, Tank Suction	1
9	▲	A3158-008	Hydraulic Hose, Man. Tank-Cooler In	1
10	▲	A3158-009	Hydraulic Hose, Airlock #6, B2	1
11	▲	A3158-010	Hydraulic Hose, Airlock #6, A2	1
12	▲	A3158-011	Hydraulic Hose, Hose Reel #6, B3	1
13	▲	A3158-012	Hydraulic Hose, Hose Reel #6, A3	1
14	▲	A3158-013	Hydraulic Hose, Feed Wheel #6, A1	1
15	▲	A3158-14	Hydraulic Hose, Floor #6, B1	1
16		075857	Hydraulic Pump	1
17	▲	A4201-001	Suction Pump Fitting	1
18	▲	FF6801-20-12	90 Degree Elbow, 1/4 male JIC 37° x 3/4 male ORB	1
19	▲	055309	7/8 M SAE St. x 9/16 M JIC - Straight	1
20		2404-20-20	Straight 1/4 male JIC 37° x 1-1/4 male NPT	1
21		012083	Ball Valve, 1-1/4 Full Port	1
22		160307	Close Nipple 1-1/4 Standard - Galvanized	1
23		011648	Hydraulic Suction Strainer	1
24		A2767-001	Hydraulic Tank Assembly	1
25		A0946-003	Cleanout Cover	2
26		075746	Return Filter (In Tank)	1
27		080329	Reservoir Sight Gauge	1
28		A1123-001	Filler Cap, Snap Ring, Strainer Basket	1
29		075747	Pressure Filter Assembly	1
30		012087	1-1/16 M SAE St. x 1-1/16 M JIC	2
31		075746-01	Return Filter Gasket	1
32		075758	Filter Indicator	1
33		A6205-001	Hydraulic Manifold Block Assembly	1
34	▲	085014	7/8 M SAE St. x 9/16 M JIC - Straight	7
35	▲	6400-10-10	Straight #12 SAE, #10 ORB	1

Continued to next page.

WHEN ORDERING PARTS, BE SURE TO STATE SERIAL NUMBER OF MACHINE

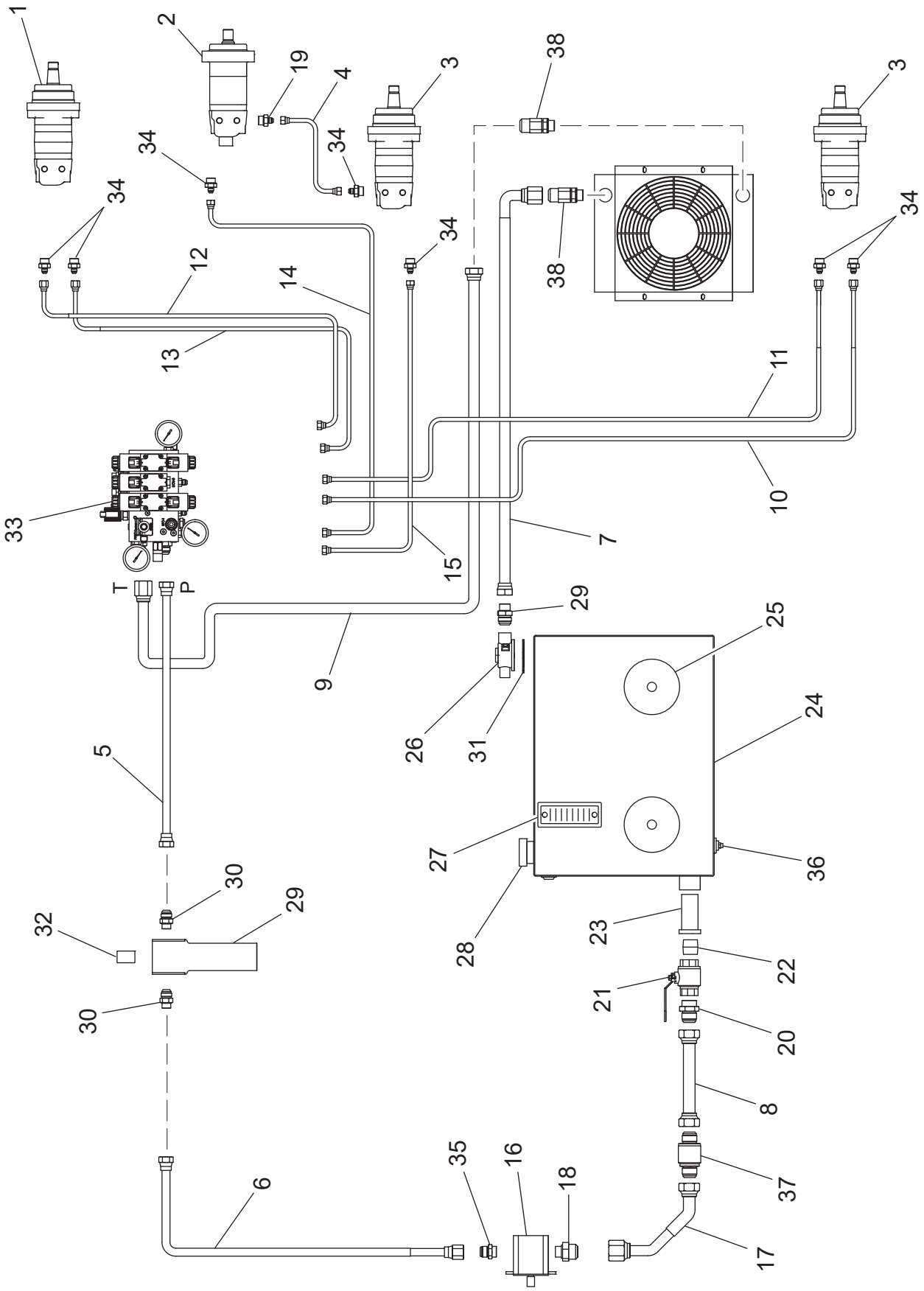

WHEN ORDERING PARTS, BE SURE TO STATE SERIAL NUMBER OF MACHINE

HYDRAULIC SYSTEM

Ref. No.		Part Number	Description	No. Req'd
36		160234	Pump Pipe Plug 3/8 in. Square Head	1
37	▲	2403-20-20	1-1/4 M JIC x 1-1/4 M JIC - Straight	1
38	▲	055383	1-5/16 - 12 M SAE x 1-5/16 M JIC	2
NOT SHOWN				
	▲	040494	LENZ #2205C-4 Hydraulic Fitting	1
	▲	A4354-001	Hose Mount,1.25	1
		A3512-001	Valve Mount	1
KITS AND MARKERS				
	▲	A7559-001	Hydraulic Hose Kit, MBH Manual Hose Reel Brake	

WHEN ORDERING PARTS, BE SURE TO STATE SERIAL NUMBER OF MACHINE

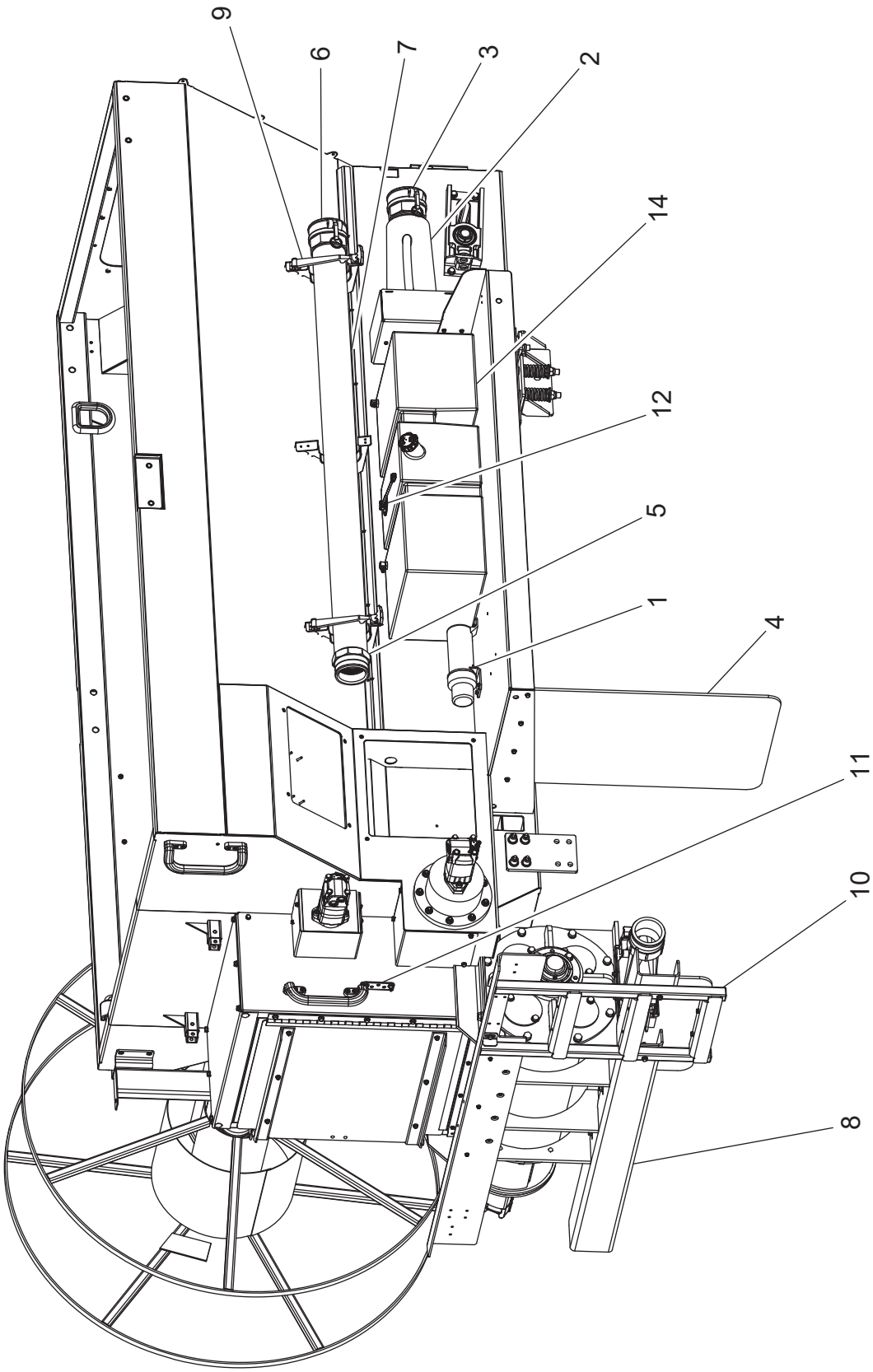

WHEN ORDERING PARTS, BE SURE TO STATE SERIAL NUMBER OF MACHINE

ACCESSORIES

Ref. No.	Part Number	Description	No. Req'd
1	A1096-001	Manual Canister	1
2	052878	Red Diffuser Cone, 4 in.	1
3	055375A	4 in. Aluminium Female Coupler	1
4	A3706-001	Mud Flap, Rubber	2
5	055374A	4 in. NPT Aluminum Adapter - Part A	1
6	055375A	4 in. Aluminium Female Coupler	1
7	045304	Hot Air Hose	1
8	A3963-001	Bumper	1
9	A4264-001	Clamp Latch	2
10	A4269-001	Ladder Weldment	1
11	A4271-001	Handle - Pull, Rubber Coated Steel	2
12	A2508-001	Fuel Tank Sending Unit, 11 in. with Gasket	1
13	055399B	Hose Assembly, 4 in. x 100 ft.	1
14	A2758-001	Diesel Fuel Tank Assembly, 27 Gallon	1

WHEN ORDERING PARTS, BE SURE TO STATE SERIAL NUMBER OF MACHINE

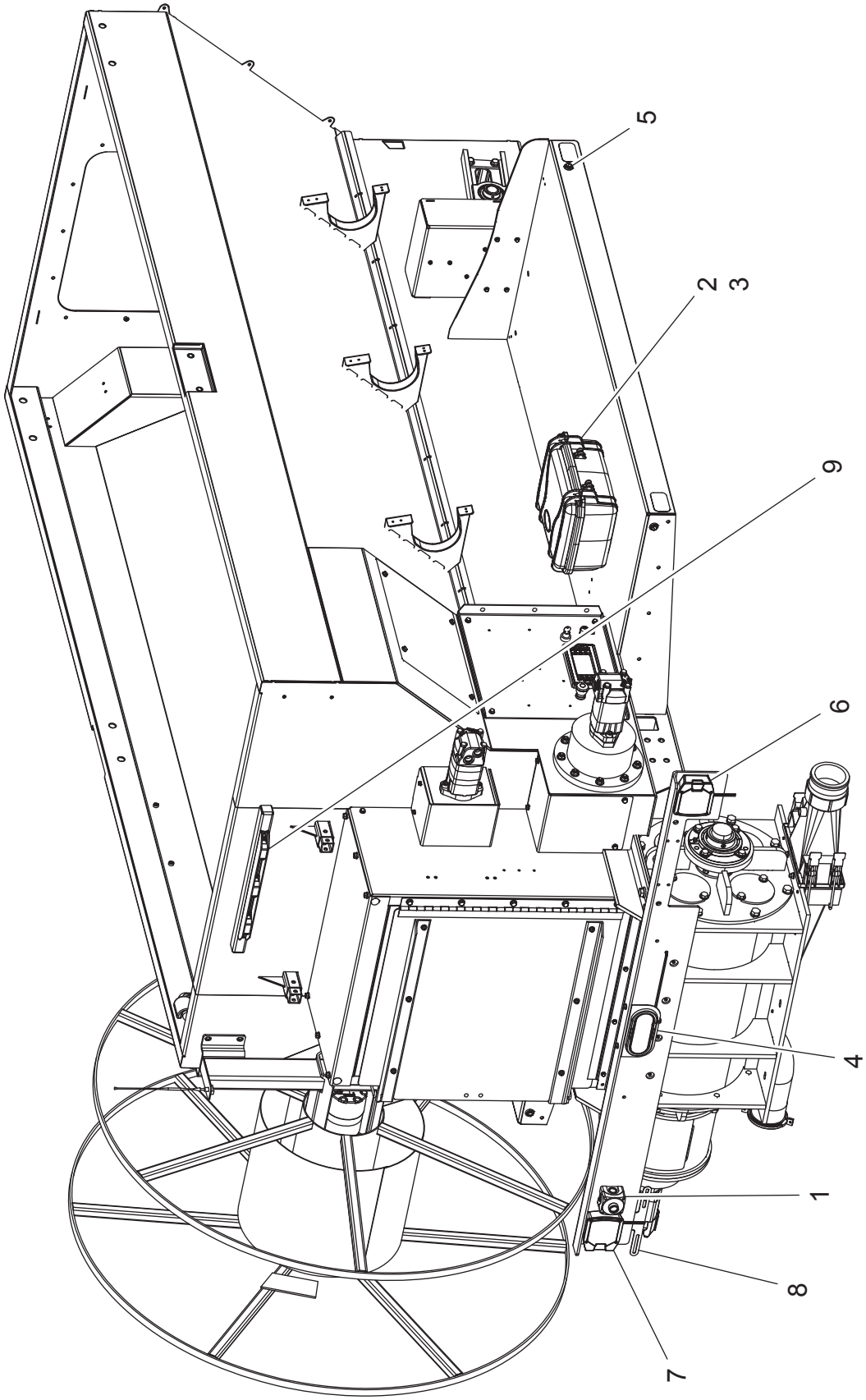

WHEN ORDERING PARTS, BE SURE TO STATE SERIAL NUMBER OF MACHINE

ELECTRICAL COMPONENTS

Ref. No.	Part Number	Description	No. Req'd
1	A3038-001	Momentary Push Button Assembly	1
2	A1198-001	Remote Box	1
3	A2195-001	Dual 2.1A USB Charger and 20A 12/24V Power Receptacle	1
4	A2757-001	Back Up Light, (White)	1
5	A1227-002	LED Light, Clearance Marker	4
6	A1450-001	Combination Tail Light, Right Hand Side, LED	1
7	A1451-001	Combination Tail Light, Left Hand Side, LED	1
8	004720	Bracket, License Plate	1
9	005944	LED Identification Light	1

WIRING COMPONENTS

Part Number	Description	No. Req'd
A3224-001	Battery Cable, Battery Positive	1
A3224-002	Battery Cable, Starter	1
A3224-003	Battery Cable, Engine Block	1
A3224-004	Battery Cable, Battery Negative	1
A4300-001	Wiring Harness, Tarp	1
A4298-001	Connector Kit, Deutsch DT04-4P	1
A4299-001	Wiring Harness, Hydraulics And Lighting	1
A4296-001	Battery Cable, Fuse Block	1
A4301-001	Wiring Harness, Tool Box	1
A4295-001	Battery Cable, Alternator	1
A4294-001	Wiring Harness, Engine	1

WHEN ORDERING PARTS, BE SURE TO STATE SERIAL NUMBER OF MACHINE

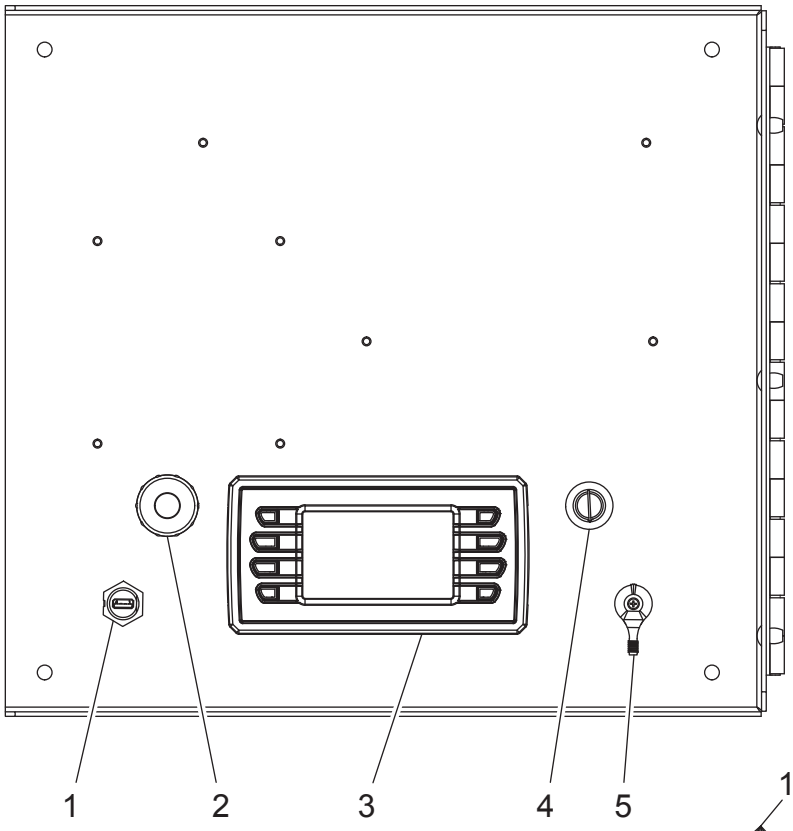

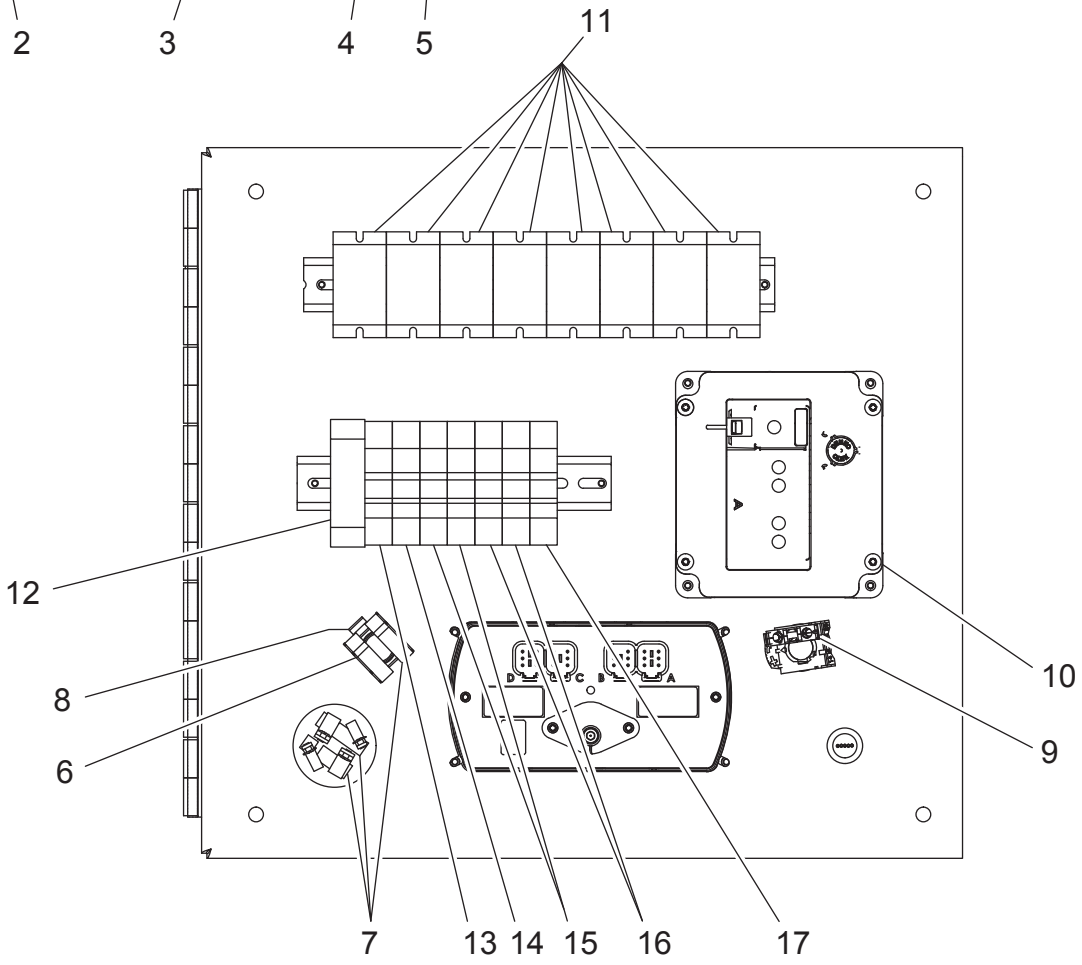

WHEN ORDERING PARTS, BE SURE TO STATE SERIAL NUMBER OF MACHINE

CONTROL PANEL COMPONENTS

Ref. No.	Part Number	Description	No. Req'd
1	----------	USB-A, Panmnt, IP67, 24AWG 10 in. [Part of the Wiring Harness, VFX40M (A4311-001)]	1
2	366164	E-Stop (Twist To Release) Kit, 1 Yellow NC Block	1
3	A7567-001	Display, Eaton Vfx40m, Mbh6 Software Flash	1
4	A7605-001	Key Switch	1
5	A7603-001	Selector Switch	1
6	A4305-001	Contact Block, Normally Closed	1
7	A4304-001	Contact Block, Normally Open	3
8	A7604-001	Adapter, Contact Block	2
9	080784	Contact Block, Green NO	1
10	A4313-001	Controller	1
11	A2931-001	Relay	8
12	A2950-001	Safety Relay	1
13	A4306-002	Circuit Breaker, 2 Amp, 48VDC, Type B Trip Curve	1
14	A4306-005	Circuit Breaker, 5 Amp, 48VDC, Type B Trip Curve	1
15	A4306-010	Circuit Breaker, 10 Amp, 48VDC, Type B Trip Curve	2
16	A4306-020	Circuit Breaker, 20 Amp, 48VDC, Type B Trip Curve	2
17	A2932-032	Circuit Breaker, 32 Amp, 48VDC, Type C Trip Curve	1
NOT SHOWN			
	A4310-001	Wiring Harness, MBH6 Control Panel	1
	A4311-001	Wiring Harness, VFX40M Display USB	1

WHEN ORDERING PARTS, BE SURE TO STATE SERIAL NUMBER OF MACHINE

BATTERY BOX

Ref. No.	Part Number	Description	No. Req'd
1	A3042-001	Battery, Wet Cell, 12VDC, 950 CCA, 175 RC, BCI Group 31	1
2	013250	Battery Disconnect Switch	1
3	A3040-001	Latch, T-Handle Flexible Draw	2
4	A3025-001	Battery Hold-Down Strap	1
NOT SHOWN			
	A43581-001	Battery Box Cover	1

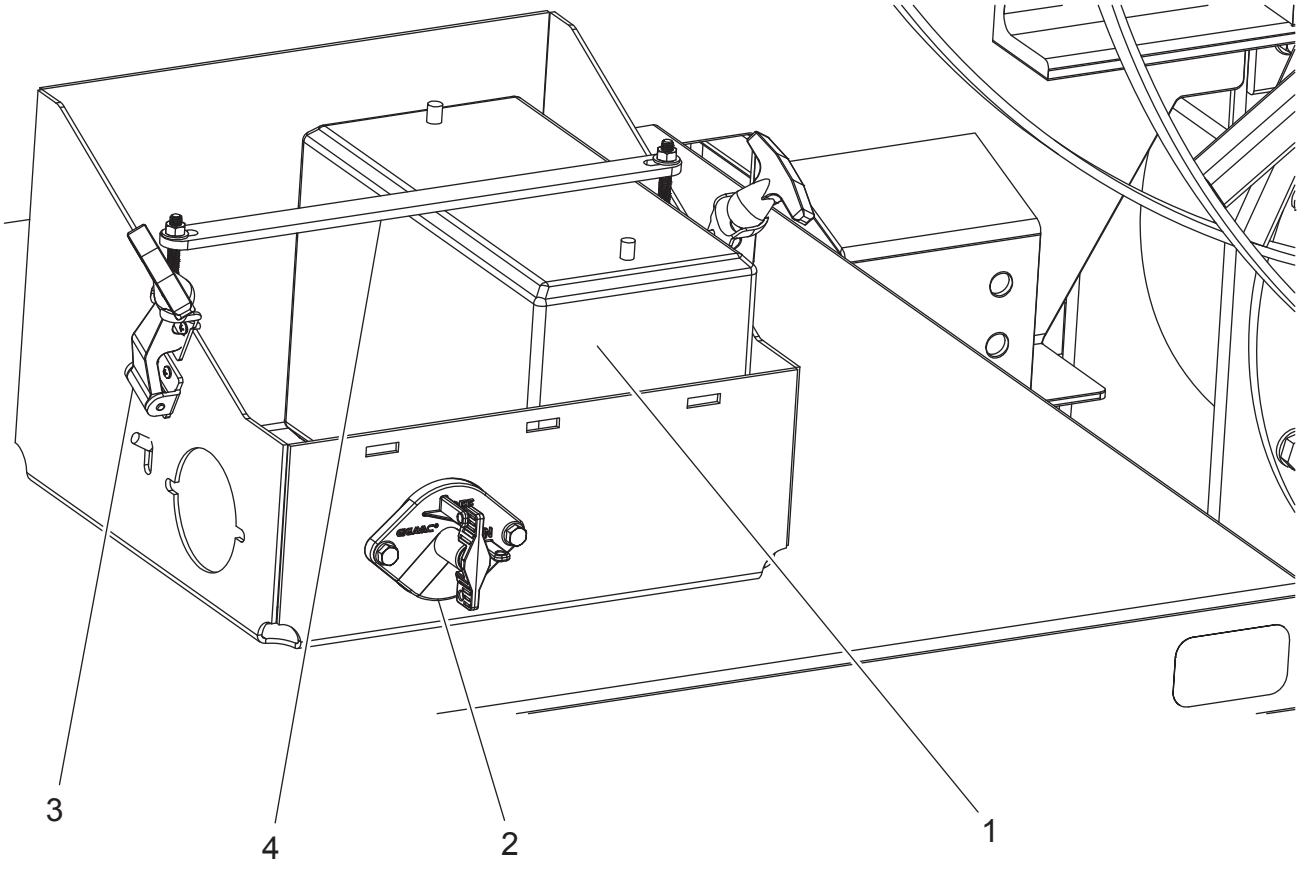

WHEN ORDERING PARTS, BE SURE TO STATE SERIAL NUMBER OF MACHINE

DISCHARGE HOSE

Ref. No.	Part Number	Description	No. Req'd
1	A3749-001	4 in. Hot Air Hose Assembly	1
	-- OR --		
	045349	5 in. Hot Air Hose Assembly	1
2	A5546-001	MBH6 Tool Kit, 4 in.	1
	-- OR --		
	A5546-002	MBH6 Tool Kit, 5 in.	1
NOT SHOWN			
	053075	Discharge Deflector Assembly	1
	075611	Discharge Gasket	1
	055399B	4 in. x 100 ft. Discharge Hose Assembly with Aluminum Couplers	1
	055398B	4 in. x 50 ft. Discharge Hose Assembly with Aluminum Couplers	1
	052965	4 in. x 100 ft. Severe Duty Bark Blower Hose Assembly	1
	052952	4 in. x 50 ft. Severe Duty Bark Blower Hose Assembly	1
	052744B	5 in. x 50 ft. Bark Blower Hose Assembly	2
	052958	5 in. x 50 ft. Severe Duty Bark Blower Hose Assembly	2
	055374	4 in. NPT Aluminum Adapter - Part A	1
	055375A	Aluminum Female Coupler	1

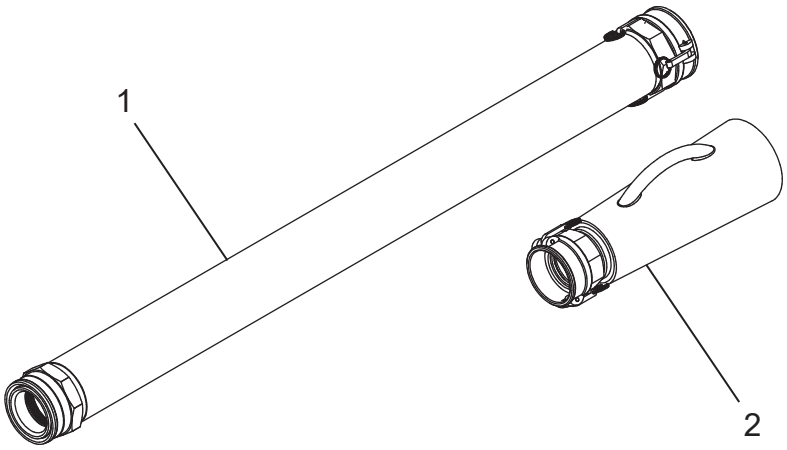

WHEN ORDERING PARTS, BE SURE TO STATE SERIAL NUMBER OF MACHINE

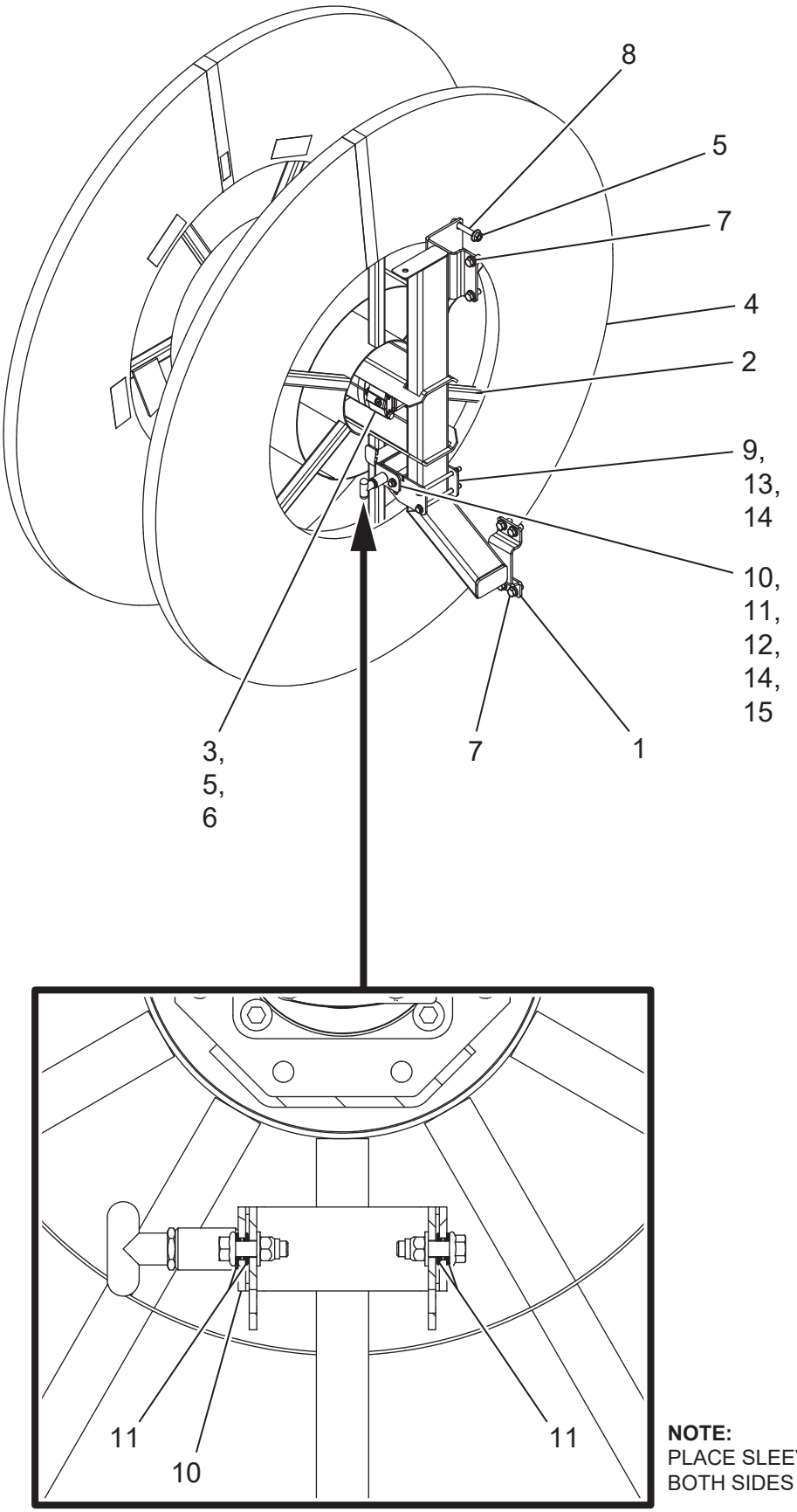

NOTE:
PLACE SLEEVE WASHERS ON
BOTH SIDES OF HOSE REEL LOCK

WHEN ORDERING PARTS, BE SURE TO STATE SERIAL NUMBER OF MACHINE

HOSE REEL ASSEMBLY

Ref. No.	Part Number	Description	No. Req'd
1	A2762-001	Hose Reel Mount Weldment, MBH6	1
2	075719	Drum Weldment	1
3	071238	Hydraulic Motor	1
4	075739	Hose Reel Side Cover	2
5	●	1/2-13 Large Hex Flange Nut	5
6	●	1/2-13 UNC - 1 3/4 Hexagon Socket Head Cap Screw	4
7	●	1/2-13 UNC x 1 Hex Flange Screw, Regular Thread	7
8	●	1/2-13 UNC x 3 Hex Flange Screw, Regular Thread	1
9	A7574-001	Hose Reel Brake Pivot Weldment	1
10	A7577-001	Hose Reel Brake Weldment	1
11	A3653-001	Sleeve Washer, Nylon	4
12	●	3/8 in. Washer	6
13	●	3/8-16 UNC - 5.5, Hex Cap Screw	2
14	●	3/8-16 Top Insert Type Prevailing Torque Type Hex Nut	4
15	●	3/8-16 UNC x 1.25 Hex Flange Screw, Regular Thread	2

KITS AND MARKERS

● Standard Hardware Item

WHEN ORDERING PARTS, BE SURE TO STATE SERIAL NUMBER OF MACHINE

TOOL BOX

Kit Ref.	Part Number	Description	No. Req'd
▲	055385	Coupler Gasket	1
▲	012681A	FINN Beige Aersol Touch-Up	1
▲	020365	Multi-Purpose Grease	1
▲	021375	Grease Gun	1
▲	021741	12 in. Whip Hose with 1/8 in. Male ends	1
▲	053075	Red Cone Assembly Kit	1
▲	052878	Red Diffuser Cone, 4 in.	1
▲	160317	Close Nipple	1
▲	055375A	4 in. Aluminum Coupler	1
▲	012305	Adhesive Label	1
		Engine Operator's Manual	1
		Blower Operator's Manual	1
		Radio Remote Transmitter Manual	1
		Material Blower Operator Instructions and Parts Manual	1
	A1096-001	Manual Canister	1
NOT SHOWN			
	A5546-001	MBH6 Tool Kit, 4 in.	
	-- OR --		
	A5546-002	MBH6 Tool Kit, 5 in.	
KITS AND MARKERS			
▲	410099-04	Tool Kit (no manuals included)	

WHEN ORDERING PARTS, BE SURE TO STATE SERIAL NUMBER OF MACHINE

RADIO REMOTE CONTROL SYSTEM

Ref. No.	Part Number	Description	No. Req'd
1	A7260-002	Radio, Basestation	1
2	FW71746	Cord Connector with Lock Nut	1
3	A4821-001	Battery, Handheld, NiMH 3.6 V, 2100 mAh	2
4	A7260-003	Radio, Handheld	1
5	A2195-001	Dual 2.1A USB Charger and 20A 12/24 V Power Receptacle	1
6	A1198-001	Equipment Case, 16 in. Weatherproof	1
7	A4818-001	Battery Charger, 12 VDC Single Slot	1
NOT SHOWN			
	A2200-004	Antenna, 900 MHz with Mount Kit	1
	A4822-002	Hip Belt	1
	A3974-001	Coaxial Adapter, BNC Female Bulkhead	1
	A4597-001	Coaxial Cable, BNC Male, 4 ft.	1

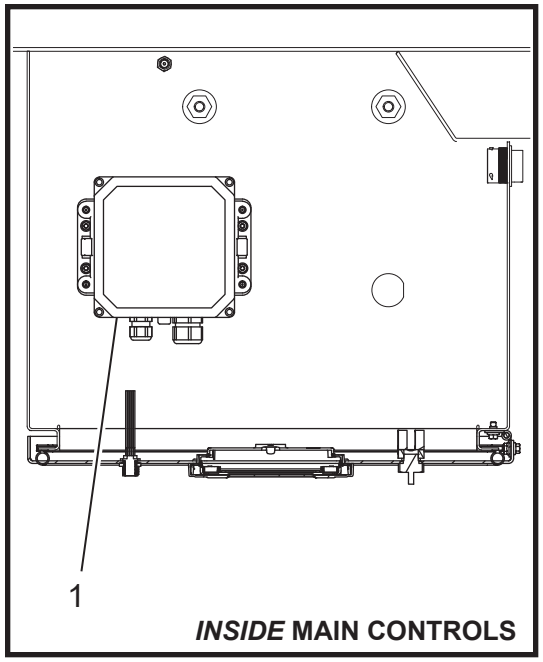

***INSIDE* MAIN CONTROLS**

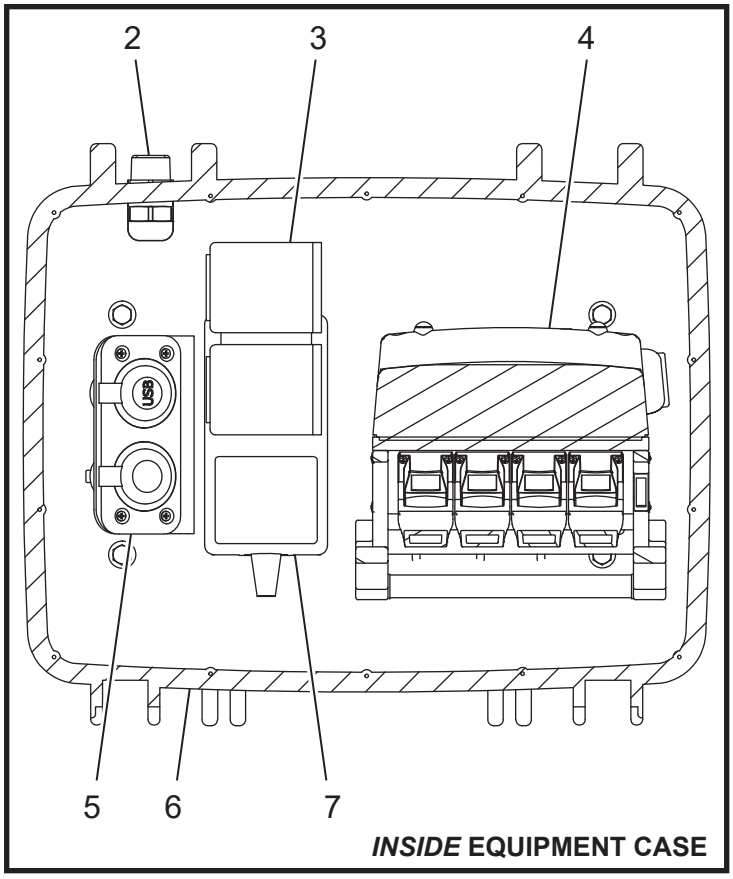

***INSIDE* EQUIPMENT CASE**

WHEN ORDERING PARTS, BE SURE TO STATE SERIAL NUMBER OF MACHINE

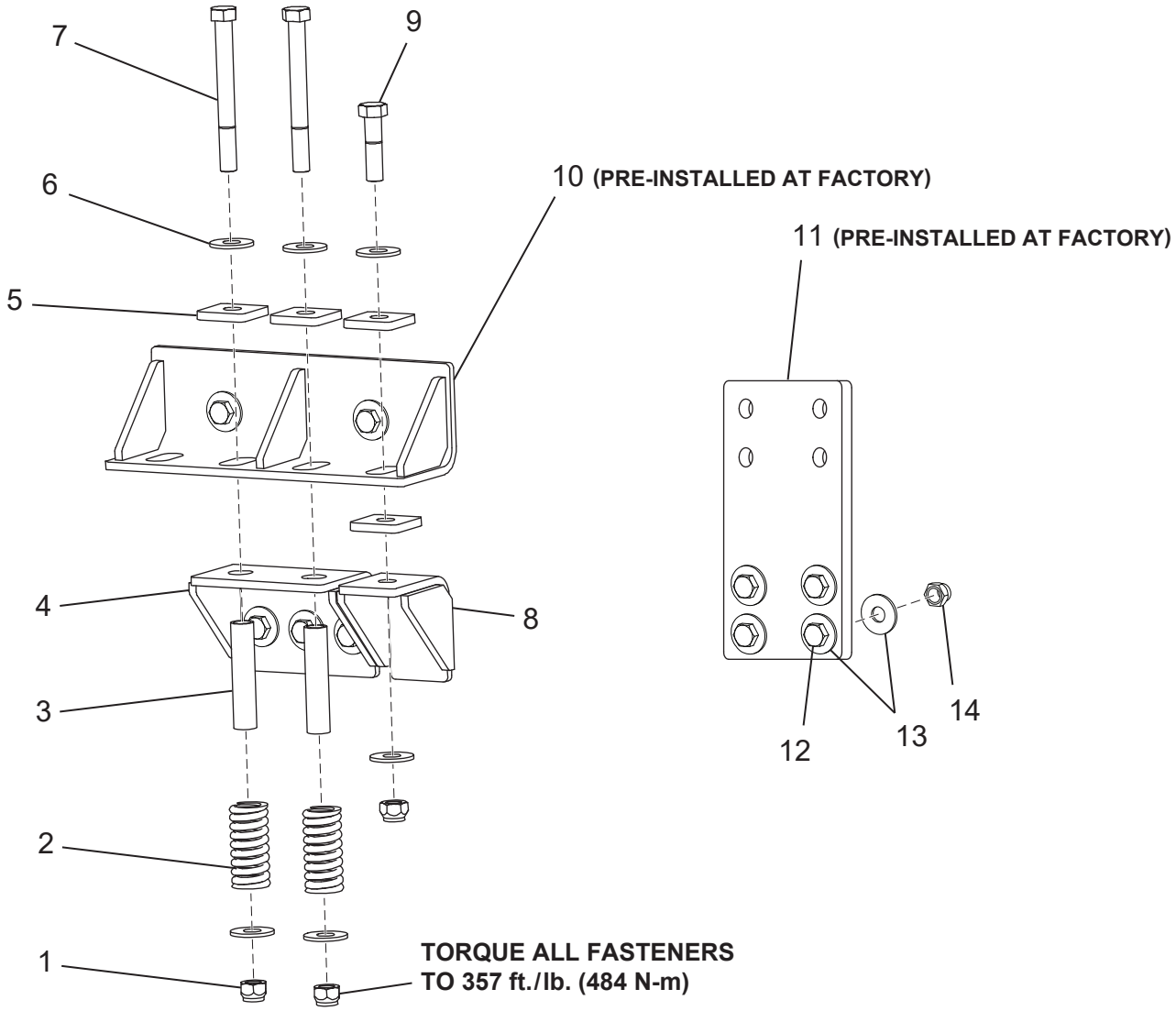

WHEN ORDERING PARTS, BE SURE TO STATE SERIAL NUMBER OF MACHINE

SPRING MOUNT ASSEMBLY

Ref. No.	Kit Ref.	Part Number	Description	No. Req'd
1	▲■	●	3/4-16 Prevailing Torque Hex Nut - *Grade 8*	3
2	▲■	011563	Truck Mount Compression Spring	2
3	▲■	A3453-001	Spring Spacer Tube	2
4	▲■	A3450-001	Lower Truck Mount Bracket Assembly	1
5	▲■	A3448-001	Square Washer	6
6	▲■	●	3/4 in. Type A Plain Washer, Wide - *Grade 8*	6
7	▲■	●	3/4-16 UNF x 7.5 Hex Cap Screw - *Grade 8*	2
8	▲	A3462-001	Truck Mount Stop Bracket Assembly	1
9	▲■	●	3/4-16 UNF x 3.5 Hex Cap Screw - *Grade 8*	1
10		A3547-001	Upper Mount	1
11		A3549-001	Rear Hard Mount	1
12	▲	●	5/8-18 UNF x 2 Hex Cap Screw - *Grade 8*	14
13	▲	●	5/8 in. Type A Plain Washer, Wide - *Grade 8*	28
14	▲	●	5/8-16 Prevailing Torque Hex Nut - *Grade 8*	14

KITS AND MARKERS

▲	A4917-001	Truckmount Kit
■	A3567-001	Spring Mount Weldment
●	Standard Hardware Item	

WHEN ORDERING PARTS, BE SURE TO STATE SERIAL NUMBER OF MACHINE

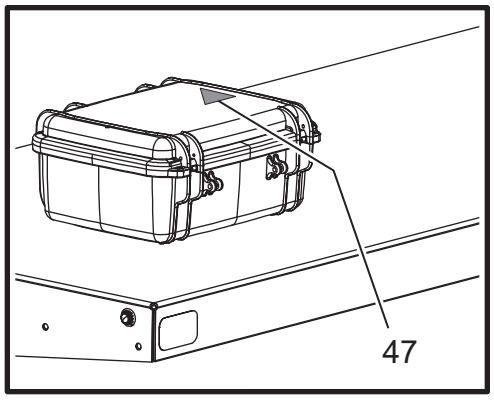

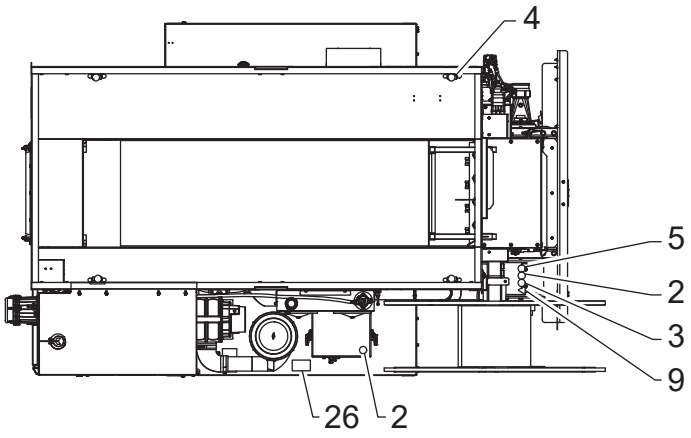

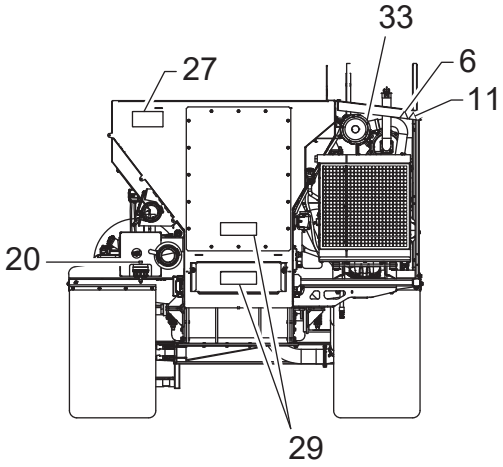

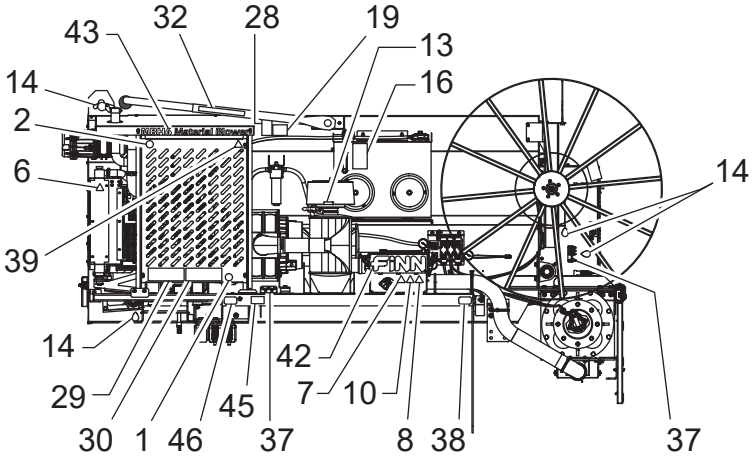

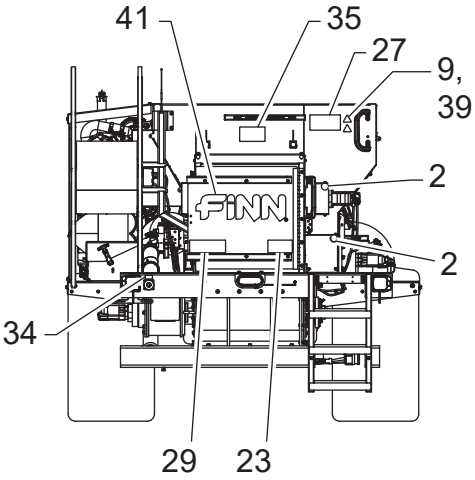

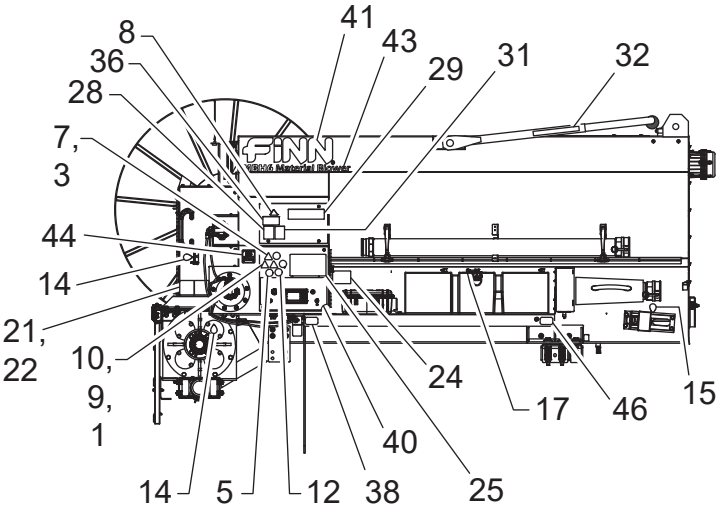

WHEN ORDERING PARTS, BE SURE TO STATE SERIAL NUMBER OF MACHINE

MBH6 DECALS

Ref. No.	Kit Ref.	Part Number	Description	No. Req'd
1	☐	----------	Do Not Power/Pressure Wash Decal	2
2	☐	----------	Do Not Remove Guard Decal	5
3	☐	----------	Read Manual Decal	2
4	☐	----------	Lift Point Decal	4
5	☐	----------	Eye Protection Decal	2
6	☐	----------	Hot Surface Hazard Decal	2
7	☐	----------	Hazard Decal	2
8	☐	----------	Fall Off Edge Hazard Decal	3
9	☐	----------	Eye Hazard Decal	2
10	☐	----------	Electrical Shock Hazard Decal	2
11	☐	----------	Burn Hazard Decal	1
12	☐	----------	CE Symbol Decal (if applicable)	1
13	☐	----------	Rectangular Decal, Service Daily	1
14	☐	----------	Decal, Service Weekly	12
15	☐	----------	Decal, Service Weekly (Up-Side Down)	4
16	☐	----------	Hydraulic Fluid Only Decal	1
17	☐	----------	Ultra Low Sulfur Fuel Decal	1
18	☐	----------	Semi-Circular E-Stop Decal	1
19	☐	----------	Decibel Decal	1
20	☐	----------	Decal, Water/Fuel Indicator	1
21	☐	----------	Decal, Explosion Hazard	1
22	☐	----------	Decal, Warning, Flying Objects	1
23	☐	----------	Decal, Sever Hazard	1
24	☐	----------	Decal, US Patent	1
25	☐	----------	Decal, Operating Instructions	1
26	☐	----------	Decal, Rotary Blower Maintenance Instructions	1
27	☐	----------	Decal, Entanglement Hazard	2
28	☐	----------	Decal, Electrocution Hazard	2
29	☐	----------	Decal, Sever Hazard/Flying Debris	5
30	☐	----------	Decal, Burn Hazard/Radiator Handling	1
31	☐	----------	Decal, Eye Protection	1
32	☐	----------	Decal, Flying Objects	2

Continued to next page.

NOTE: *All of the decals listed here with a ☐ in the part number space are available only in the MBH6 Decal Kit. Replacement decals and plates for those identified with a part number are* ***not*** *part of the decal kit and* ***must*** *be ordered separately.*

WHEN ORDERING PARTS, BE SURE TO STATE SERIAL NUMBER OF MACHINE

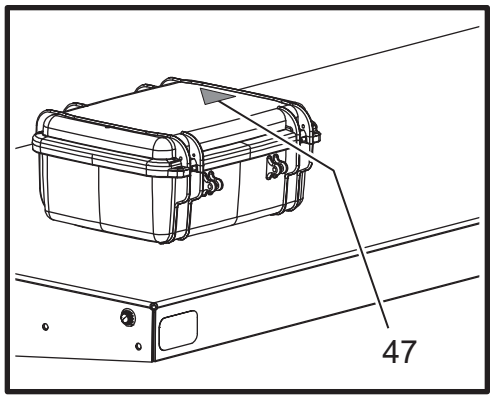

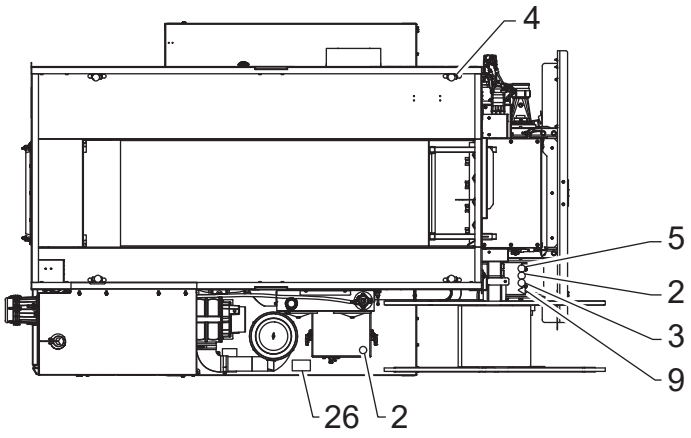

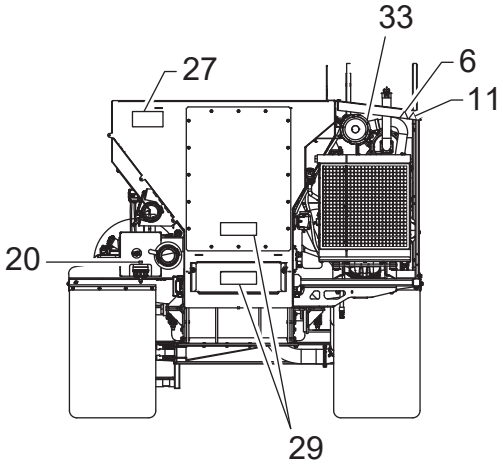

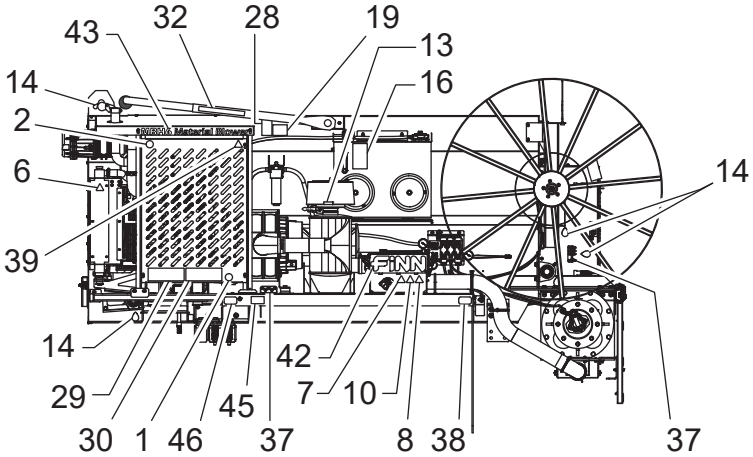

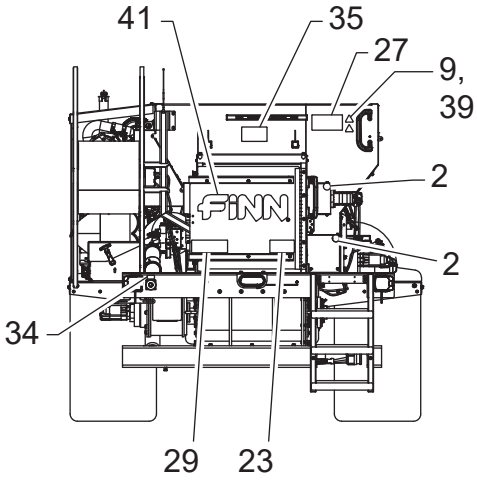

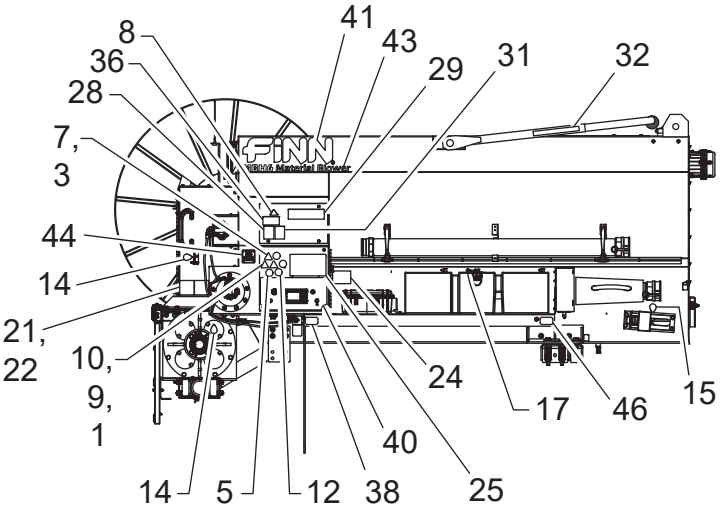

WHEN ORDERING PARTS, BE SURE TO STATE SERIAL NUMBER OF MACHINE

MBH6 DECALS

Ref. No.	Kit Ref.	Part Number	Description	No. Req'd
33	☐	----------	Decal, Do Not Use Ether Or Starting Fluid	1
34	☐	----------	Decal, Hose Reel Rewind	1
35	☐	----------	Decal, Danger, Do Not Enter	1
36	☐	----------	Decal, Ear Protection	1
37	☐	----------	Decal, Grease Port	2
38		A1304-002	Reflector, Red	2
39	☐	----------	Remote Start Hazard Decal	2
40		A3952-001	Control Panel Decal	1
41		023174	Decal Finn - Large, Red	2
42		031235	Decal Finn - Medium, Red	1
43		A4318-001	MBH6 Material Blower Decal	2
44		A4691-001	Skid Nameplate/Serial Plate	1
45		012260	Metal Plate "IMPORTANT"	1
46		A1304-001	Reflector, Amber	2
47		041382-49	Battery Charging in Enclosed Area Hazard	1
KITS AND MARKERS				
	☐	A4165-001	MBH6 Decal Kit	

NOTE: *All of the decals listed here with a ☐ in the part number space are available only in the MBH6 Decal Kit. Replacement decals and plates for those identified with a part number are **not** part of the decal kit and **must** be ordered separately.*

WHEN ORDERING PARTS, BE SURE TO STATE SERIAL NUMBER OF MACHINE

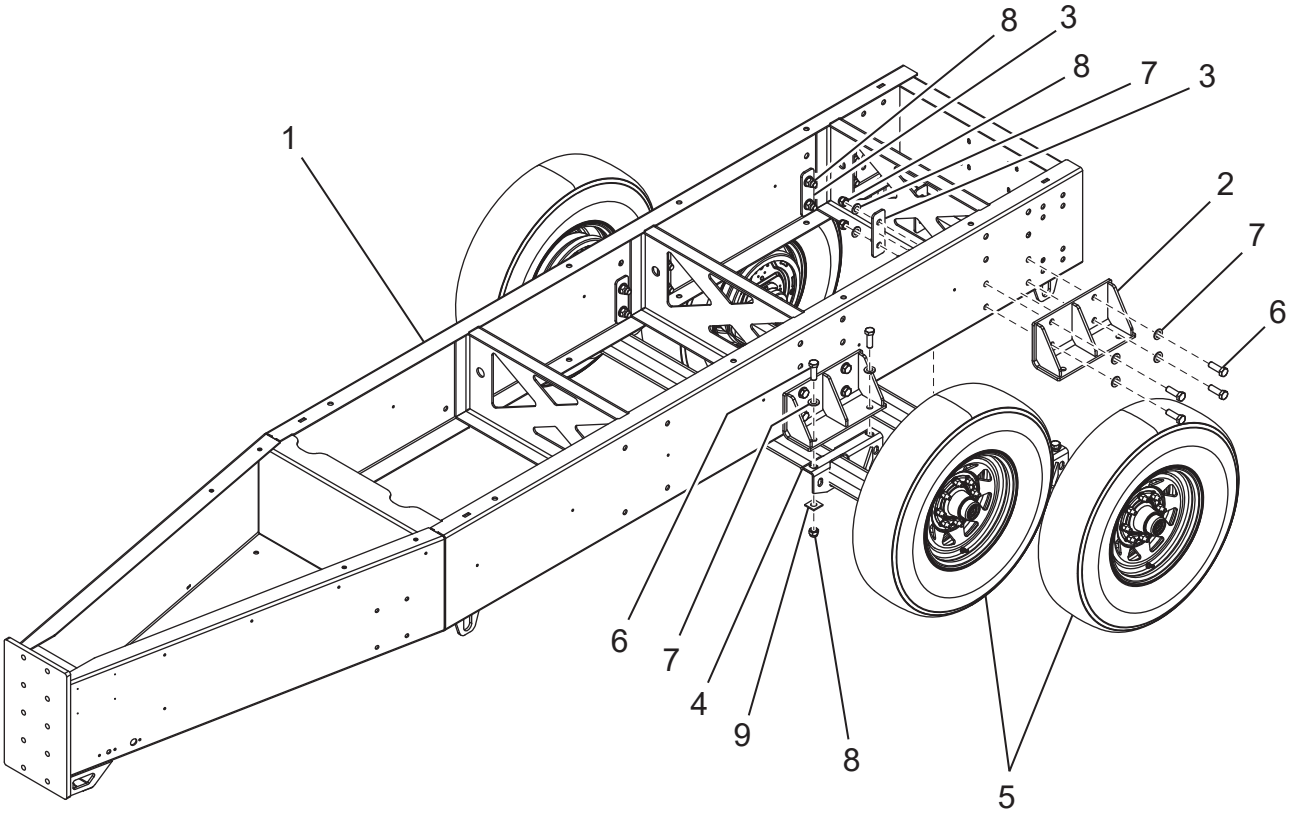

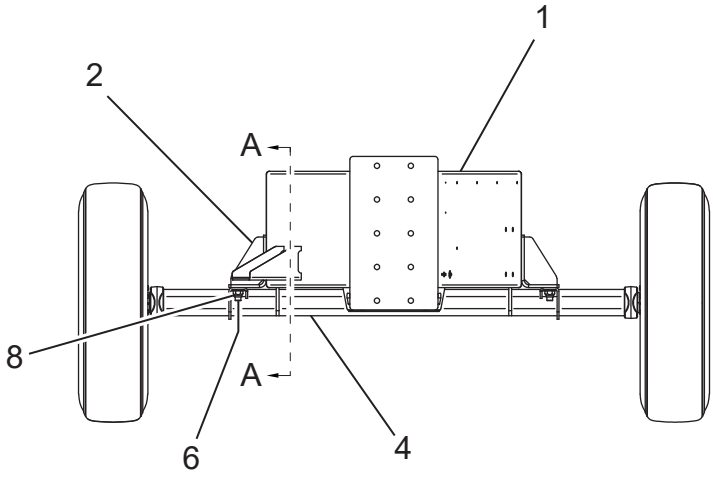

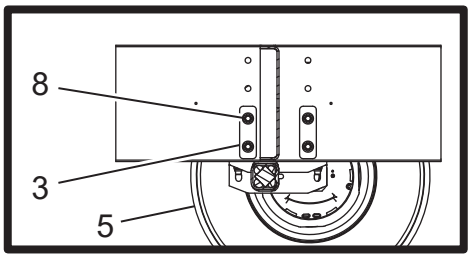

SECTION A-A

WHEN ORDERING PARTS, BE SURE TO STATE SERIAL NUMBER OF MACHINE

OPTIONAL TRAILER ASSEMBLY - FRAME

Ref. No.	Kit Ref.	Part Number	Description	No. Req'd
1		A6394-001	Weldment, Trailer Frame	1
2		A6384-001	Weldment, Axle Bracket	4
3		A6395-001	Plate - Axle Backing	8
4		005808	Axle	2
5		005827	Wheel Assembly	4
6		●	3/4-16 UNF - 2.25 Hex Cap Screw, Grade 8	24
7		●	3/4 Plain Washer, Grade 8	40
8		●	3/4-16 UNF Prevailing Torque Type Hex Nut, Grade 8	24
9		●	3/4 Square Washer	8

KITS AND MARKERS

● Standard Hardware Item - Available at your local hardware store.

WHEN ORDERING PARTS, BE SURE TO STATE SERIAL NUMBER OF MACHINE

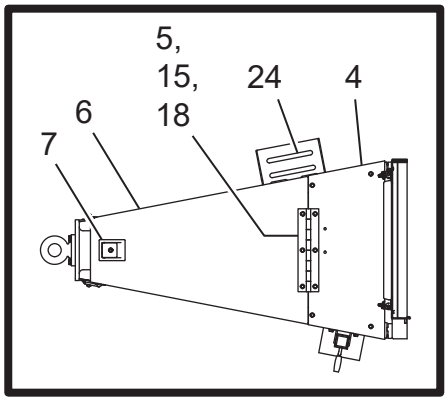

SECTION A-A

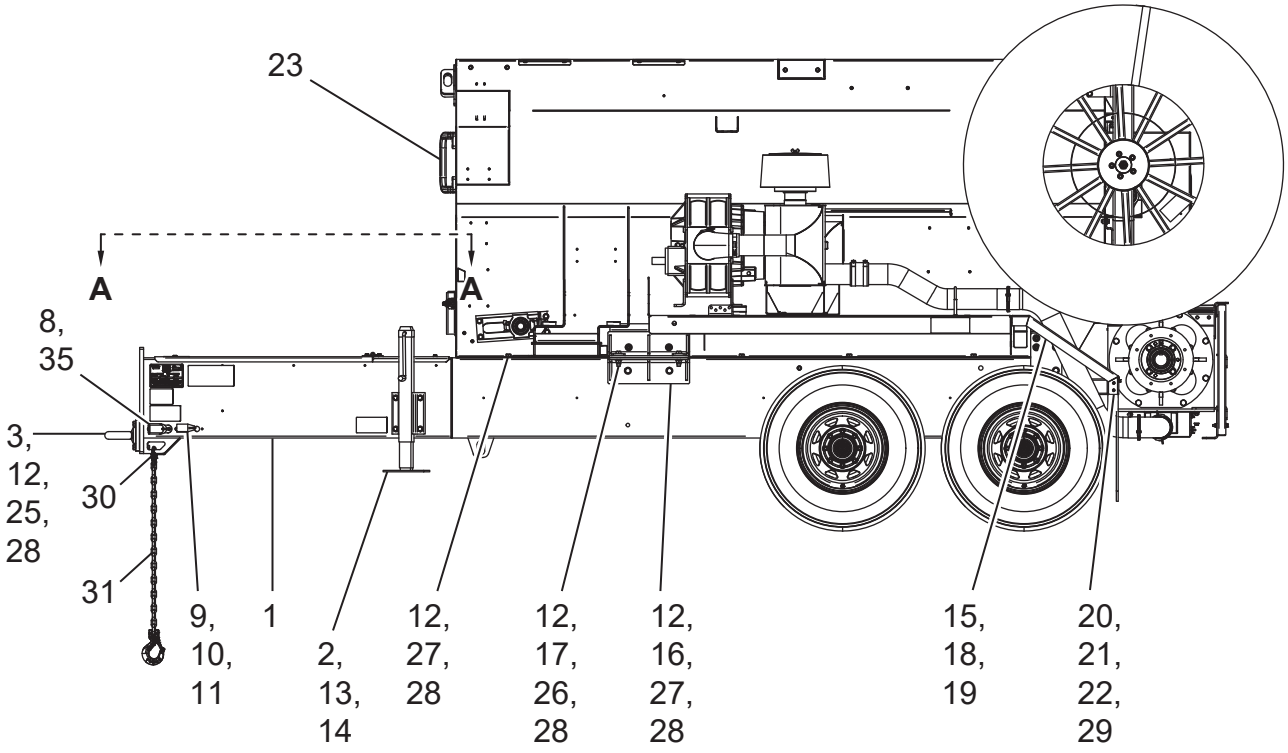

WHEN ORDERING PARTS, BE SURE TO STATE SERIAL NUMBER OF MACHINE

OPTIONAL TRAILER ASSEMBLY - COMPONENTS 1

Ref. No.	Part Number	Description	No. Req'd
1	A6396-001	MBH Trailer Frame Assembly	1
2	080701	Jack Weldment	1
3	080043	Tow Ring	1
4	A7328-001	Tongue Lid	1
5	A5153-001	Piano Hinge	1
6	A6400-001	Tool Box Lid	1
7	A6415-001	Latch, Push to Close, Keyed	1
8	023424	Breakaway Switch	1
9	075592	7-Blade RV Style Trailer Plug	1
10	A6405-001	Wiring Harness, MBH6 Trailer	1
11	060281	Loop Clamp	11
12	●	5/8-11 Metal Prevailing Torque Type Hex Nut, Grade 8	18
13	●	1/2-13 UNC x 1.5 Hex Flange Screw - Regular Thread	4
14	●	3/8-16 Hex Flange Nut	4
15	●	3/8-16 UNC x 1 Hex Flange Screw - Regular Thread	20
16	A6398-001	Weldment - Truck Mount Bracket	1
17	A3448-001	Square Washer, Truck Mount	2
18	●	3/8-16 UNC Hex Flange Nut	20
19	A6381-001	Trailer Fender	2
20	●	1/4-20 UNC x 1.25 Hex Flange Screw - Regular Thread	5
21	075732	Mud Flap	2
22	075795	Mud Flap Mount	2
23	A4271-001	Handle - Pull, Rubber Coated Steel	1
24	190018	Safety Walk, 2 in. Thick, 2 ft.	2
25	●	5/8-11 UNC - 2.75 Hex Cap Screw, Grade 8	4
26	●	5/8-11 UNC - 2.5 Hex Cap Screw, Grade 8	2
27	●	5/8-11 UNC - 2 Hex Cap Screw, Grade 8	10
28	●	5/8 in. Plain Washer, Type A, Narrow, Grade 8	40
29	●	1/4-20 UNC Hex Flange Nut	4
30	004888	Coupling Link	2
31	A6808-001	Trailer Safety Chain	2
NOT SHOWN			
	●	5/16-18 UNC - 3/4 Hex Socket Head Cap Screw, Grade 8	4
KITS AND MARKERS			

● Standard Hardware Item - Available at your local hardware store.

WHEN ORDERING PARTS, BE SURE TO STATE SERIAL NUMBER OF MACHINE

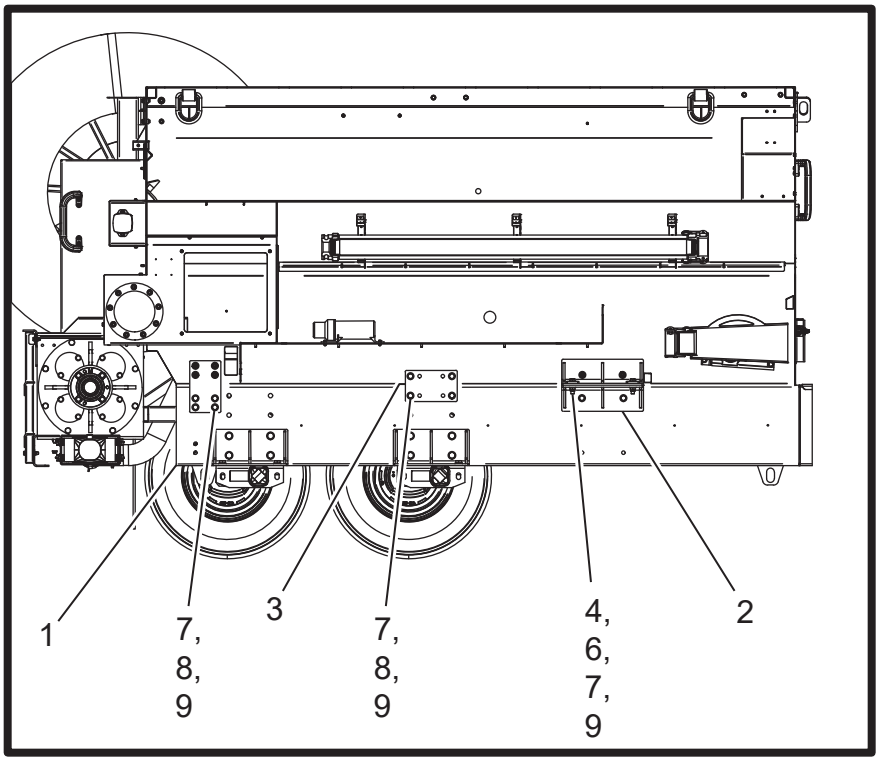

SECTION B-B

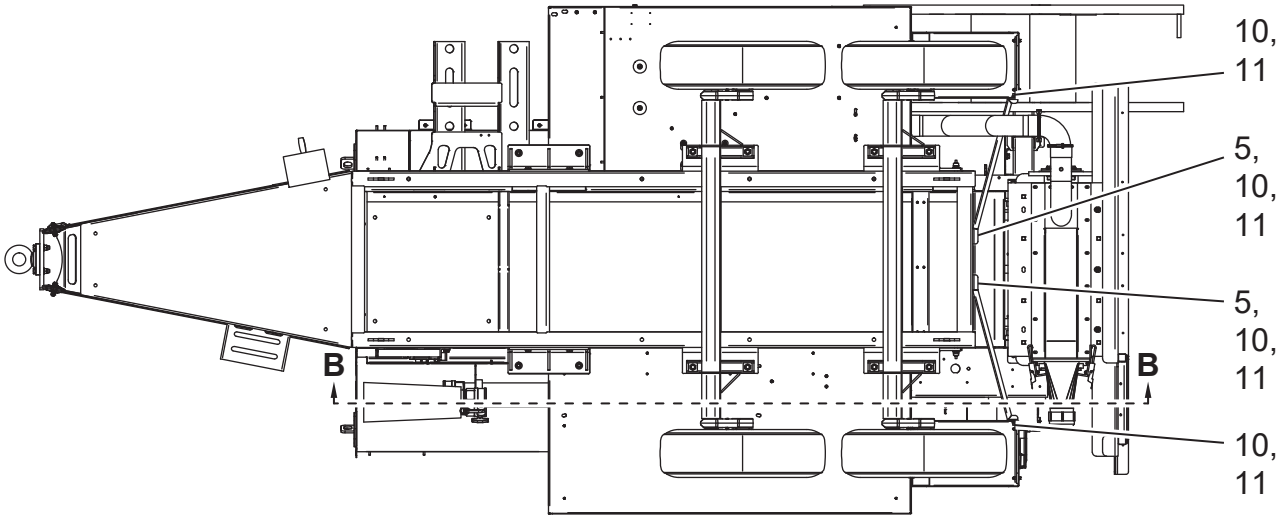

WHEN ORDERING PARTS, BE SURE TO STATE SERIAL NUMBER OF MACHINE

OPTIONAL TRAILER ASSEMBLY - COMPONENTS 2

Ref. No.	Part Number	Description	No. Req'd
1	A6396-001	MBH Trailer Frame Assembly	1
2	A6398-001	Weldment - Truck Mount Bracket	1
3	A3549-001	Mount, Truck, Sidepanel	1
4	A3448-001	Square Washer, Truck Mount	2
5	A6380-001	Fender Angle Bracket	2
6	●	5/8-11 UNC - 2.5 Hex Cap Screw, Grade 8	2
7	●	5/8-11 UNC - 2 Hex Cap Screw, Grade 8	10
8	●	5/8 in. Plain Washer, Type A, Narrow, Grade 8	16
9	●	3/8-16 UNC Hex Flange Nut	24
10	●	3/8-16 UNC x 1 Hex Flange Screw - Regular Thread	4
11	●	3/8-16 UNC Hex Flange Nut	4

KITS AND MARKERS

● Standard Hardware Item - Available at your local hardware store.

WHEN ORDERING PARTS, BE SURE TO STATE SERIAL NUMBER OF MACHINE

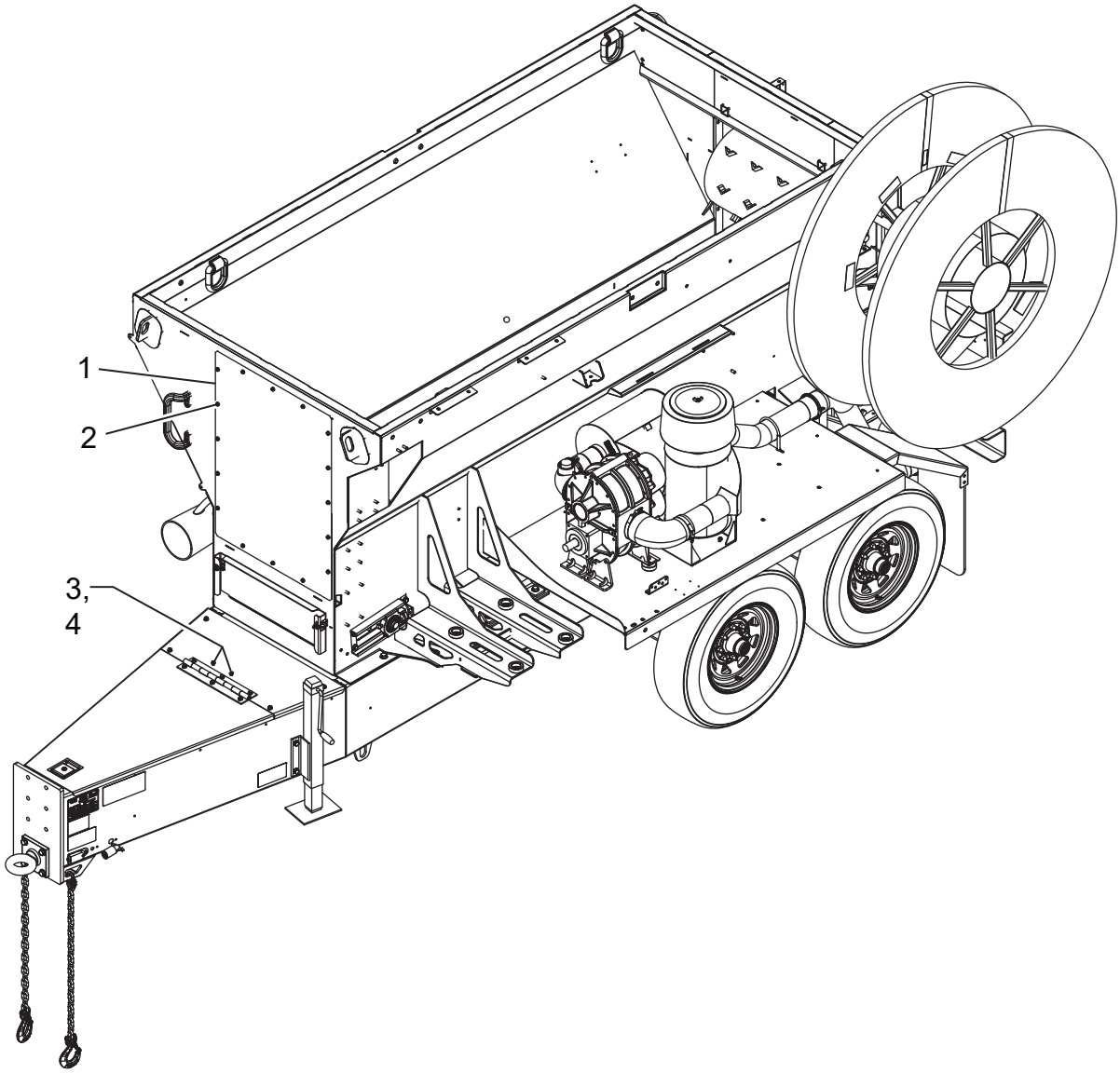

WHEN ORDERING PARTS, BE SURE TO STATE SERIAL NUMBER OF MACHINE

OPTIONAL TRAILER ASSEMBLY - NO FEED CHUTE

Ref. No.	Part Number	Description	No. Req'd
1	A3044-001	Plate - Cover, Hopper	1
2	●	5/16-18 UNC x 0.75 Hex Flange Screw - Regular Thread	16
3	●	5/16-18 UNC x 1 Hex Flange Screw - Regular Thread	2
4	●	5/16-18 UNC Hex Flange Nut	2

KITS AND MARKERS

● Standard Hardware Item - Available at your local hardware store.

WHEN ORDERING PARTS, BE SURE TO STATE SERIAL NUMBER OF MACHINE

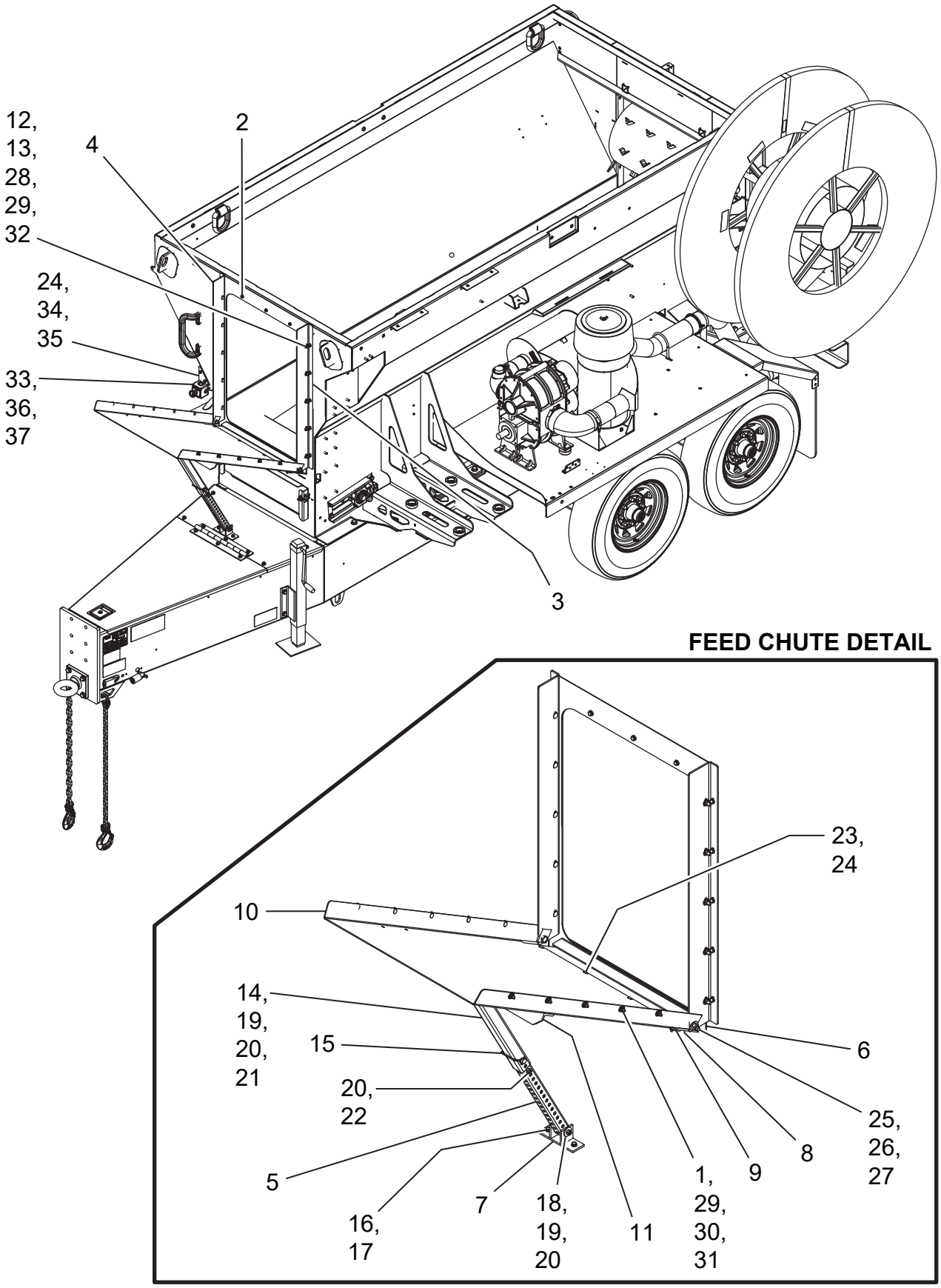

WHEN ORDERING PARTS, BE SURE TO STATE SERIAL NUMBER OF MACHINE

OPTIONAL TRAILER ASSEMBLY - WITH FEED CHUTE

Ref. No.	Part Number	Description	No. Req'd
1	A6824-008	Keps Nut, 1/4 - 20, Zinc Plated Steel	10
2	●	5/16-18 UNC x 0.75 Hex Flange Screw - Regular Thread	16
3	A6800-001	Sheet, Formed, Left Hand Support Angle	1
4	A6799-001	Sheet, Formed, Right Hand Front Support	1
5	A6802-001	Jack Support Tube	1
6	A6801-001	Sheet, Formed, Bottom Support, Feed Chute	1
7	031095-01	Jack Mounting Weldment	1
8	055623-01	Rubber Flap	1
9	055582-21	Clamping Strap	1
10	055638	Feed Chute Weldment	1
11	055577	Feed Chute Support	1
12	055629	Vinyl Side Shield	2
13	007913	Rubber Strap with S-Hooks	2
14	055577-04	Jack Support Sleeve	1
15	FW71225	3/8 x 2-1/2 Quick Pin	1
16	●	5/16-18 UNC x 1 Hex Flange Screw - Regular Thread	2
17	●	5/16-18 UNC Hex Flange Nut	2
18	●	3/8-16 UNC x 2.75 Hex Cap Screw	1
19	●	3/8 Wide Plain Washer, Type B	4
20	●	3/8-16 Metal Prevailing Torque Type Hex Nut	3
21	●	3/8-16 UNC x 3.25 Hex Cap Screw	1
22	●	3/8-16 UNC x 2 Hex Cap Screw	1
23	●	1/4-20 UNC x 1 Round Head Square Neck Bolt	4
24	●	1/4-20 UNC Hex Flange Nut	8
25	●	1/2-13 UNC x 1.5 Hex Cap Screw	2
26	●	1/2-13 Metal Type Prevailing Torque Type Hex Nut	2
27	●	1/2 Regular Plain Washer, Type B	2
28	●	5/16-18 UNC x 1 Round Head Bolt	10
29	●	5/16 Regular Plain Washer, Type B	20
30	●	1/4-20 UNC x 0.75 Round Head Bolt	10

Continued to next page.

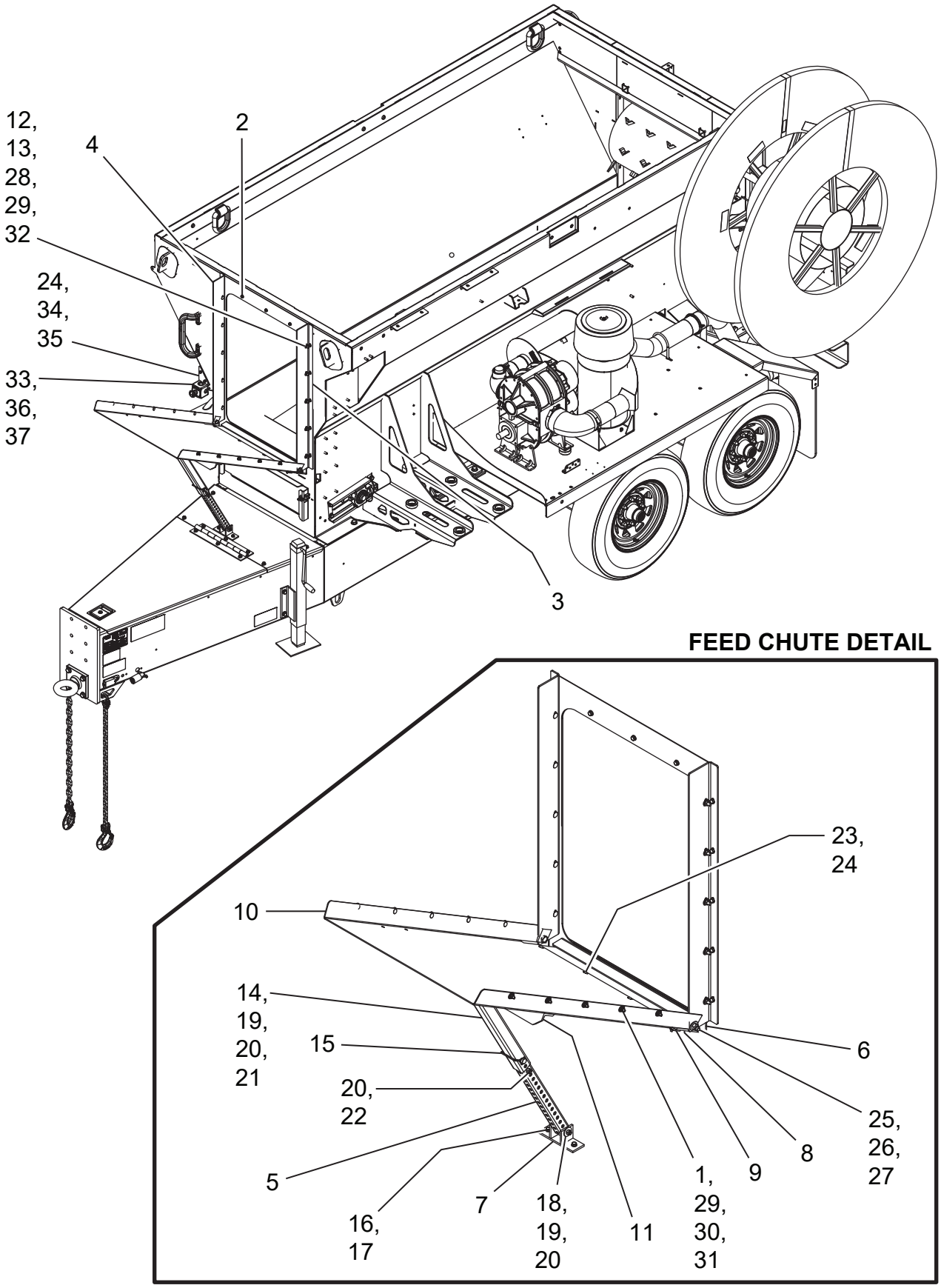

WHEN ORDERING PARTS, BE SURE TO STATE SERIAL NUMBER OF MACHINE

OPTIONAL TRAILER ASSEMBLY - WITH FEED CHUTE

Ref. No.	Part Number	Description	No. Req'd
31	●	1/4 Regular Plain Washer, Type B	10
32	A6824-010	Keps Nut, 5/16-18, Zinc Plated Steel	10
33	A2395-001	E-Stop Station Assembly	1
34	A7256-001	Sheet - E Stop Bracket	1
35	●	1/4-20 UNC x 1 Hex Flange Screw - Regular Thread	4
36	●	No. 8-32 x 1 Cross Recessed Pan Head Machine Screw	4
37	●	No. 8-36 HMSNI Hex Machine Screw Nut	4

KITS AND MARKERS

● Standard Hardware Item - Available at your local hardware store.

WHEN ORDERING PARTS, BE SURE TO STATE SERIAL NUMBER OF MACHINE

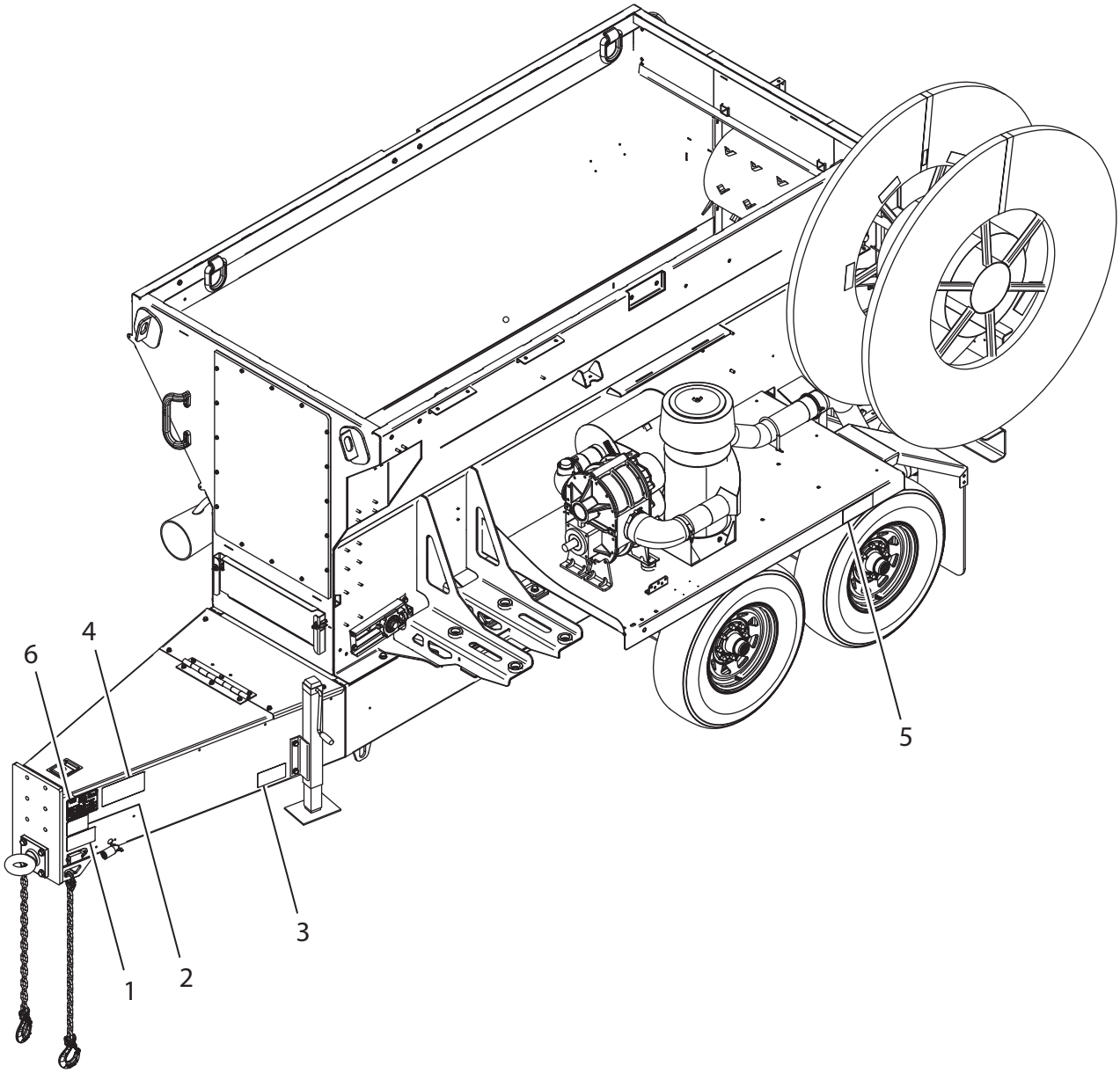

WHEN ORDERING PARTS, BE SURE TO STATE SERIAL NUMBER OF MACHINE

OPTIONAL TRAILER SAFETY DECALS AND SERIAL PLATE

Ref. No.	Kit Ref.	Part Number	Description	No. Req'd
1	☐	----------	Decal "Warning! Control Hazard! Lights..."	1
2	☐	----------	Decal "Warning! Load Balance and GVWR..."	1
3	☐	----------	Decal "Warning! Personal Injury Hazard! Trailer Jack..."	1
4	☐	----------	Decal "Warning! Runaway Vehicle Hazard! Breakaway..." and "Control Hazard! Chains..."	1
5	☐	----------	Decal "Warning! Control Hazard! Tires..." (Dual Axle)	1
6		005807	Trailer Unit Serial Plate	1
NOT SHOWN				
		●	1/8 in. Blind Rivet for Trailer Unit Serial Plate	4
KITS AND MARKERS				
	☐	A2270-001	Trailer Safety Decal Kit	
	●	Standard Hardware Item - Available at your local hardware store.		

WHEN ORDERING PARTS, BE SURE TO STATE SERIAL NUMBER OF MACHINE

NOTES