FINN CORPORATION

9281 LeSaint Drive • Fairfield, Ohio 45014
Phone (513) 874-2818 • Fax (513) 874-2914
Sales: 800-543-7166

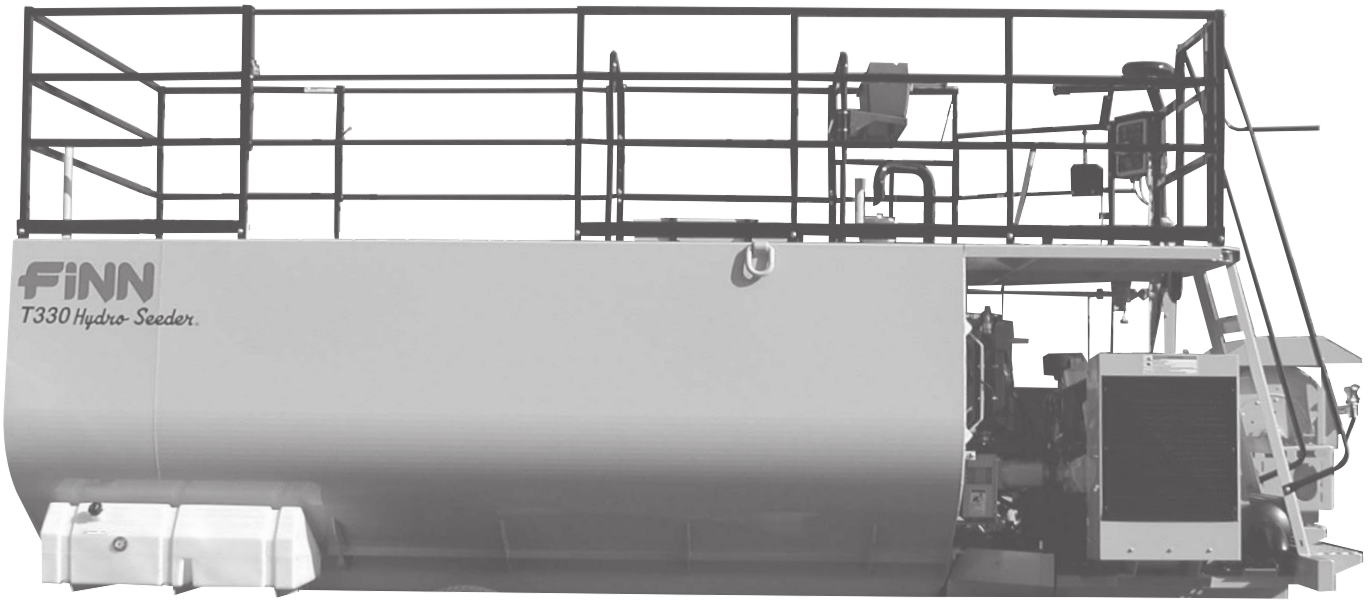

T280/330 HydroSeeder®

Parts and Operator's Manual

Model **SEA** Serial No. _____

LBT280-T330-SEA

NOTES

INDEX

SAFETY FIRST 1
SAFETY SUMMARY SECTION 2-5
OPERATION & MAINTENANCE 6-40
Definition of Hydroseeding 6
The Finn HydroSeeder® & How It Works 6
Mounting The HydroSeeder® 6
Dimensions, Capacities & Truck Requirements 6-8
Truck Mounting Calculations 7
General Mounting Guidelines 7
Attachments 8
Pre Start Check 9
Equipment Check 9-10
Two Valve Operation 10-11
1. Discharge Through Boom 11
2. Extension Hose Through Boom 11
3. Extension Hose or Hose Reel Through Remote Port 11-12
Starting Procedure 12
PowerView 12-14
Faceplate 13
PowerView Operation 13-14
PowerView Menus (First Time Start-Up) 13
Stored Fault Codes 14
Area Coverage - Material Capacity 14-15
Tank Capacity Chart 16
Loading (For Wood Fiber Mulch) 17-18
Prior to Application 18
Discharge Nozzle Selection 18
Application of Slurry 19-21
I. General Application Techniques 19
II. Discharge Through the Boom 19
III. Procedures When Using Hoses 19-21
A. Pump Take-Off System or Hose Reel w/Remote Valve 20
B. Extension Hose System w/o Remote Valve 20
C. Hose Work w/Radio Remote 21
Reloading Procedure 21
Liming w/The HydroSeeder® 21-22
Troubleshooting Your HydroSeeder® 22-26

Continued . . .

Hydroseeder® is a registered trademark of the Finn Corporation

INDEX CONTINUED

OPERATION & MAINTENANCE Cont'd . . .
Cleaning and Maintenance 26-27
After First 4-8 Hours of Operation 26
Daily 26-27
Weekly or Every 40 Hours of Operation 27
Seasonal and Winter Storage Maintenance 27
Hydraulic System 27
Lubrication Chart 28-29
Clump Parts 30-31
Clump Maintenance Section 32-33
Clump Assembly 34-35
Notes 36-40

PARTS SECTION 41-79
Notes 42
Pictorial Reference 43
Structure & Railing 44-45
Hatch Assembly 46-47
Discharge Boom Assembly 48-49
Engine & Radiator 50-51
Engine Sheet Metal 52-53
Air Intake & Exhaust Systems 54-55
Engine Wiring Diagram 56-57
Clump, Piping & Discharge Assembly 58-59
Clump Assembly 60-61
Controls 62-63
Control Box Wiring 64-65
Agitator & Seal Assembly 66-67
Hydraulic System 68-69
Hydraulic Agitator Drive 70
Ground Level Controls 71
Hose Reel Assembly 72-73
Decals 74-75
Discharge Hose Extensions 76
Recommended Spare Parts and Repair Kits 77
Tool Kit 78
Notes 79

WARRANTY 80

WARRANTY REGISTRATION CARDS 81

SAFETY FIRST

With any piece of equipment, new or used, the most important part of its operation is **SAFETY!**

Finn Corporation encourages you and your employees to familiarize yourselves with your new equipment and to stress safe operation.

The first five pages of this manual are a summary of all the main safety aspects associated with this unit. Be sure to read completely before operation of machine.

This symbol is used throughout the operation and maintenance sections of this manual to call attention to safety procedures.

- Pay Attention -

DANGER: **Immediate hazards which WILL result in severe personal injury or death.**

WARNING: **Hazards or unsafe practices which COULD result in severe personal injury or death.**

CAUTION: **Hazards or unsafe practices which COULD result in minor personal injury or product or property damage.**

IMPORTANT: Indicates that equipment or property damage could result if instructions are not followed.

NOTE: Gives helpful information.

Finn Corporation

CALIFORNIA

Proposition 65 Warning

The engine exhaust and some of its constituents are known to the State of California to cause cancer, birth defects, and other reproductive harm.

CALIFORNIA

Proposition 65 Warning

Battery posts, terminals and related accessories contain lead and lead compounds, chemicals known to the State of California to cause cancer and reproductive harm. Wash hands after handling.

HYDROSEEDER® SAFETY SUMMARY SECTION

It is important that all operators of this machine are familiar with all of the safety aspects covered in this section and have read the entire Operator's Manual before operating the machine. Always keep a copy of this manual with the machine. It is the responsibility of the operator of the machine to fully understand this safety section. Remember that YOU are the key to safety. Good safety practices protect not only you but also the people working with and around you. Keep in mind that this safety section is written for this type of machine only. Practice all other usual and customary safe working precautions; and above all, remember that safety is up to you.

The FINN HydroSeeder® is designed to mix and apply water, seed, fertilizer, agricultural lime and hydraulic mulch to the prepared seedbed. The resultant slurry from mixing one or more of the above materials may react causing harmful or deadly gasses within the tank. Heat, evaporation or extended emptying period can/will accelerate the formation of these gasses. Please contact your supplier(s) of these slurry components regarding their potential reactivity.

I. PRE-START EQUIPMENT CHECK (equipment check is to be made with the engine off):

1. If you have a chassis mounted unit, check devices securing HydroSeeder® to the truck or trailer frame.

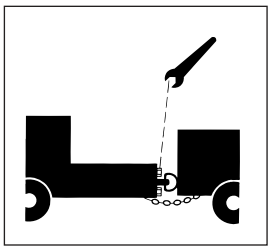

2. If HydroSeeder® is a trailer unit, check hitch and hitch bolts, lights, brakes and all safety components.
3. Make sure loading hatch bag cutter is in place and secure.
4. Check that all guard railing is in place and secure.
5. Verify that all guards are in place.
6. With the ignition switch on, verify that the signal horn is operating correctly.
7. By carefully looking down through the loading hatch, inspect the slurry tank for foreign objects. Never enter the tank without following the procedures described in #3 of the Maintenance section in this safety summary.
8. Remove unnecessary objects (or material) from the tank top.
9. Make sure no one is working on or inside the machine. Signal "All Clear" before starting the engine.
10. Inspect all hydraulic hoses for cracks, bulges or damage. If hoses are bad replace immediately.
11. Inspect all discharge hoses for cracks, bulges or damage. If hoses are bad replace immediately.

II. MACHINE OPERATION:

1. Always wear safety goggles when operating the machine. Other safety attire such as safety shoes, ear protection, gloves, hard hats, dust masks, etc. should be worn as required by warning decals on machine, operator's manuals or job site requirements. Remove rings, watches, etc. Avoid loose fitting clothing that may get caught in rotating machinery.

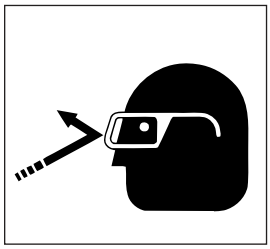

2. Do not operate the machine without all guards in place.

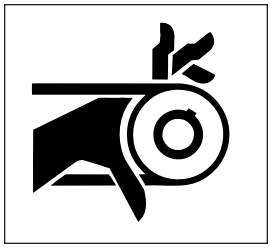

3. Do not load unit while in transit. Load only when parked and unit is as level as possible. Take care not to drop pens, lighters, etc. or pieces of paper or plastic bags into the tank, as these objects might plug the slurry system. Should any object be dropped into the tank, do NOT reach into the tank to retrieve the foreign object. See #3 under Maintenance on Page 4 before allowing any personnel to enter the tank.
4. Make sure area to be sprayed is clear of all persons, animals, etc.
5. The driver of the carrying or towing vehicle is responsible for the safety of the operator(s) of the machine. Make sure the driver is aware and avoids all possible hazards to the operator(s) of the machine, such as low tree limbs, low power lines, etc. Vehicles on which equipment is mounted or towed must be stopped and started gradually. Avoid abrupt starts or stops. Never operate on a slope or a hill that may endanger the

driver and/or the operator(s). All personnel should review and be familiar with stop/start signals between the driver and operator(s) before going into operation. Only the operator should be located on the platform during operation.

6. Operator(s) of equipment should never ride on the machine at speeds of greater than 5 MPH (8 kmh).

7. Never operate machine in an enclosed area without venting the engine exhaust of both the equipment and vehicle on which the equipment is mounted. Deadly carbon monoxide fumes can accumulate.

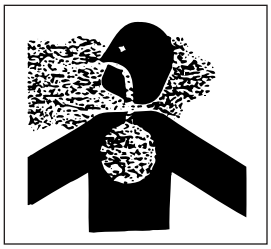

8. Never operate this or any other machinery when fatigued, tired, under the influence of alcohol, illegal drugs or medication. You must be in good physical condition and mentally alert to operate this machine.

9. Never modify the machine. Never remove any part of the machine (except for service and then reinstall before operating).

10. Use proper means (steps, ladder) for mounting and dismounting of the machine. Never mount or dismount a moving machine.

III. SLURRY APPLICATION:

1. Do not aim discharge spray toward power-lines, transformers, or other high voltage electrical conductors. Also do not aim discharge spray towards people, animals or anything other than the intended application area.

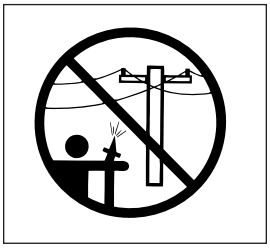

2. Never engage the clutch when both the recirculation and discharge valves are closed. Operation with both valves closed will result in extreme heat generation that could cause severe bodily injury and damage to the equipment.

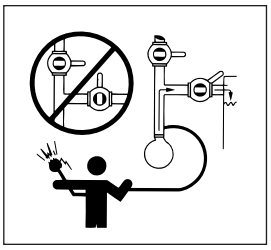

3. Recirculation valve must be open and material flowing back into the tank when using the remote valve. A closed or plugged recirculation line will cause extreme heat in the pump or discharge lines which will result in severe bodily injury and damage to the equipment.

4. During application through a hose, high pressure can be exerted at the end of the hose. Hose holding personnel must establish good footing. The operator should apply gradual pressure to the hose only after hose holding personnel are firmly positioned and have firm control of the hose. Additional personnel to direct hose may be necessary if working on slopes. The proper technique for hose holding personnel is to firmly grasp the hose over the shoulder or under both arms. Never hold the hose so it goes between the legs. If the hose holding personnel finds that it is uncomfortable for him to handle the hose by himself additional hose holders should be positioned at the end of the hose.

5. Plan application so that the furthest area is covered first; working back toward the HydroSeeder®, so that the individuals are not walking back over slippery ground.

6. Before opening any valves or pipe clamps shut machine down and check if material in the pipe is hot. If hot, do NOT open valve or pipe clamps as the hot material may cause severe personal injury. Allow to cool and open with caution.

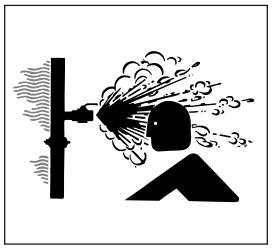

7. Except when loading materials, keep loading hatch lid closed to protect operator and prevent splashing of wet material onto the tank top.

8. Wash off spillage of slippery mulch or slurry additive from the tank top and platform before operating equipment.

MAINTENANCE:

1. Before servicing the machine, turn off engine and allow all moving parts to stop. To prevent accidental starting disconnect battery cables. Tag the engine operating area to show that the machine is being serviced. Use lockout/tagout procedure (OSHA 29 CFR 1910.147).

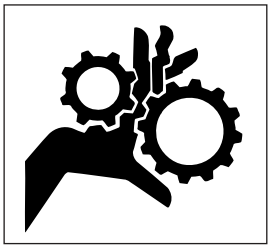

2. Certain hydroseeding amendments, when combined with or without the addition of water or heat or the element of time, may react causing harmful or deadly gasses! Consult your material suppliers regarding reactivity information. The slurry tank must be flushed and drained after each day of operation.

3. Your slurry tank may be considered a confined space by OSHA under 29 CFR 1910.146. Before entering any confined space, your company must develop a procedure for safe entry. Make sure your company's plan meets all the requirements of 29 CFR 1910.146. including the following:

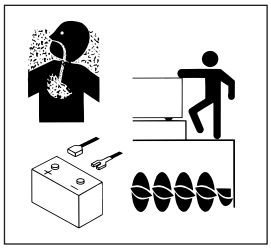

   a) Drain, flush and ventilate tank interior.
   b) Turn off engine and disconnect battery cables and perform lockout/tagout procedures. (29 CFR 1910.147)
   c) Provide continuous ventilation or proper breathing apparatus.
   d) If tank must be entered, personnel entering the tank must be tethered to a lifeline.
   e) Provide stand-by individual outside of tank able to communicate with person inside and able to haul him out with lifeline if necessary.

4. Before loosening any clamps or opening any valves, determine if material in the line is hot by feeling the pipe. Do NOT allow material to come in contact with personnel. Severe bodily injury could result.

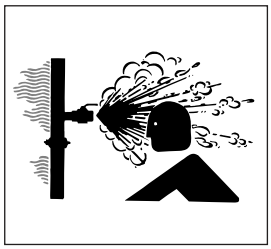

5. On trailer units, perform general maintenance such as checking the safety chains, hitch and hitch bolts, tires, brakes. Repair or replace if worn or broken. Never operate machine on improperly inflated or damaged tires. Always use a safety cage or cable restraints when re-inflating a repaired tire.

6. Radiator maintenance: Liquid cooling systems build up pressure as the engine gets hot. Before removing radiator cap, stop the engine and let the system cool. Remove radiator cap only after the coolant is cool.

7. Battery maintenance: Lead-acid batteries contain sulfuric acid, which damage eyes of skin on contact. Always wear a face shield to avoid acid in the eyes. If acid contacts the eyes, flush immediately with clean water and get medical attention. Wear rubber gloves and protective clothing to keep acid off skin. Lead-acid batteries produce flammable and explosive gasses. Keep arcs, sparks, flames and lighted tobacco away.

8. Filling of fuel: Never fill the tank with the engine running, while smoking or when near an open flame. Never smoke while handling fuel or working on the fuel system. The fumes in an empty container are explosive. Never cut or weld on fuel lines, tanks or containers. Move at least 10 feet (3 meters) away from fueling point before starting engine. Wipe off any spilled fuel and let dry before starting engine.

   NOTE: Be careful not to allow fuel, lubricant, hydraulic fluid or cooling fluids to penetrate into the ground or be discharged into the water system. Collect all fluids and dispose of them properly.

9. It is recommended that only authorized genuine FINN replacement parts be used on the machine.

10. Do not use either cold start fluid if engine is equipped with glow plug type preheater or other intake manifold type preheater. It could cause an explosion or fire and severe injury or death.

11. Diesel fuel or hydraulic fluid under pressure can penetrate the skin or eyes and cause injury, blindness or death. Pressure may build up in the hydraulic system; use caution when removing the cap.

12. Make certain that all decals on the machine are maintained in good legible condition. Replacement decals are available through Finn Corporation by specifying part number shown in the lower right hand corner of the decal. See page 5 for the current safety decals mounted on the unit. See pages 74-75 in the Parts Manual for the location and quantity of all decals on this unit.

CURRENT SET OF SAFETY DECALS

DANGER

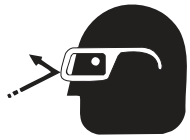

CONFINED SPACE HAZARD!
(Reference: OSHA 29 CFR 1910.146)
Before entering tank:

1. Drain, flush and ventilate tank interior.
2. Turn off engine and disconnect battery cables.
3. Continuously ventilate area or wear appropriate breathing apparatus.
4. Provide standby individual outside tank able to communicate with person inside and able to remove him with a lifeline if necessary.

FLYING MATERIAL HAZARD!
Wear eye protection around operating equipment.
Failure to comply will result in death or serious injury.

P/N 12686-01

DANGER

ELECTROCUTION HAZARD!

DO NOT aim stream toward electrical lines.

Avoid spraying toward bystanders.

Failure to comply will result in death or serious injury.

P/N 11567

WARNING

SEVER HAZARD!
Keep hands clear!
Rotating fan and gears.
DO NOT operate without guards or doors in place.
Shut off engine, disconnect battery and allow all moving parts to stop before servicing.
FLYING DEBRIS!
Wear eye protection around equipment.
Failure to comply could result in death or serious injury.

P/N 31463

WARNING

Do not operate without guards in place.

Failure to comply could result in death or serious injury.

P/N 12179

WARNING

BURN HAZARD!
Cooling system is under pressure.
Allow system to cool before handling.
Remove radiator cap slowly.
Wear appropriate safety gear.
Failure to comply could result in death or serious injury.

RADIATOR HANDLING INSTRUCTIONS

1. Use a 50/50 solution of water and antifreeze. Using 100% antifreeze will result in engine damage.
2. Check and replenish water prior to use. More water will be consumed when operating in hot conditions.
3. If overflow pipe begins emitting vapor, check and replenish water.
4. Remove and clean screen when dirty.
5. Check and clean fins periodically. Clogged fins will increase water consumption.
6. Protect radiator from fertilizer corrosion by washing radiator core with water.

P/N 31462

WARNING

BURN HAZARD!
Contents could be under pressure.

DO NOT come in contact with material.

Ensure material in line is not hot before loosening clamps or opening valves.

DO NOT operate pump with both recirculation and discharge valves closed.

DO NOT use remote valve unless recirculation valve is open.

Excessive heat or bodily injury could occur.

Failure to comply could result in death or serious injury.

P/N 5216

WARNING

FALL HAZARD!
All gates must be closed during operation.
Failure to comply could result in death or serious injury.

P/N 12821

WARNING

BURN HAZARD!
Hot exhaust!
Stay back!
Failure to comply could result in death or serious injury.

012278

CAUTION

FALL HAZARD!
ALWAYS face ladder when mounting and dismounting.
Failure to comply may result in moderate or minor injury.

P/N 12698

OPERATION AND MAINTENANCE MANUAL FOR FINN T280 &T330 HYDROSEEDERS®

This manual gives you step-by-step instructions for the operation and maintenance of the Finn HydroSeeder®. For best results and to insure longer life of the equipment, please follow these instructions carefully. For your safety read the entire manual before operating this unit.

DEFINITION OF HYDROSEEDING:

Hydroseeding is the process whereby seed, fertilizer and/or lime and wood fiber mulch (using water as a carrying medium) are applied on the soil to establish vegetation.

THE FINN HYDROSEEDER® AND HOW IT WORKS:

The Finn HydroSeeder® will apply seed, fertilizer and/or lime, wood fiber mulch, or stabilizing materials in any prescribed or desired combination. The materials placed in the HydroSeeder® slurry-tank are mixed with water and kept in suspension by a dual agitation process, recirculation of slurry and mechanical agitation, thus forming a slurry that is pumped to the discharge assembly and directed onto the seed bed by the operator. This equipment is designed to accomplish hydroseeding in one easy operation with maximum efficiency.

MOUNTING THE HYDROSEEDER®:

For speed and mobility of operation, the HydroSeeder® should be mounted on a truck or trailer, however, it is important to select a carrier with sufficient capacity to handle the added weight.

DANGER: **Pick-up hooks on HydroSeeders® are for lifting empty machines ONLY. Use appropriate spreader bar for the tank width. Ensure all capacities of lifting devices are rated for 10,000 lbs (4,545.45 kg) or greater.**

DIMENSIONS, CAPACITIES, & TRUCK REQUIREMENTS:

- ***CF** Back of cab to end of frame
- **C** Distance from HydroSeeder® front to center of gravity
- ***CA** Back of cab to center of rear axle or trunnion on tandem
- ***F** Front axle weight – Empty
- ***FL** Front axle weight – Loaded
- **G** Distance from center of bogie to HydroSeeder® center of gravity
- **HW** HydroSeeder® weight
- ***RE** Rear axle weight – Empty
- ***RL** Rear axle weight – Loaded
- ***WB** Truck wheel base

	TITAN280		TITAN330		
	English	(Metric)	English	(Metric)	
Truck GVW **	49,600 lbs.	(22,320 kg.)	61,000 lbs.	(27,669 kg.)	64
CA **	120 in.	(304+ cm.)	157 in.	(398+ cm.)	
C *(loaded)*	82 in.	(208 cm.)	100 in.	(254 cm.)	
C *(empty)*	122 in.	(309+ cm.)	134 in.	(340+ cm.)	
OAL	209 in.	(530+ cm.)	250 in.	(635+ cm.)	
HW *(empty)*	11,690 lbs.	(5,300 kg.)	12,340 lbs.	(5,600 kg.)	13
HW *(water only)*	34,790 lbs.	(15,780 kg.)	40,480 lbs.	(18,361 kg.)	42
HW *(full load)* ***	38,350 lbs.	(17,390 kg.)	44,750 lbs.	(20,300 kg.)	46

* These dimensions needed from the truck supplier as well as front axle capacity & rear axle capacity.

** Truck GVW depends on the truck weight. CA dimensions are approximate only, and depend on the front and rear axle capacities, as well as the front and rear empty axle weights.

***Weight of HydroSeeder®, water, and full charge of granular solids only. No auxiliary equipment or loads included.

TRUCK MOUNTING CALCULATIONS:

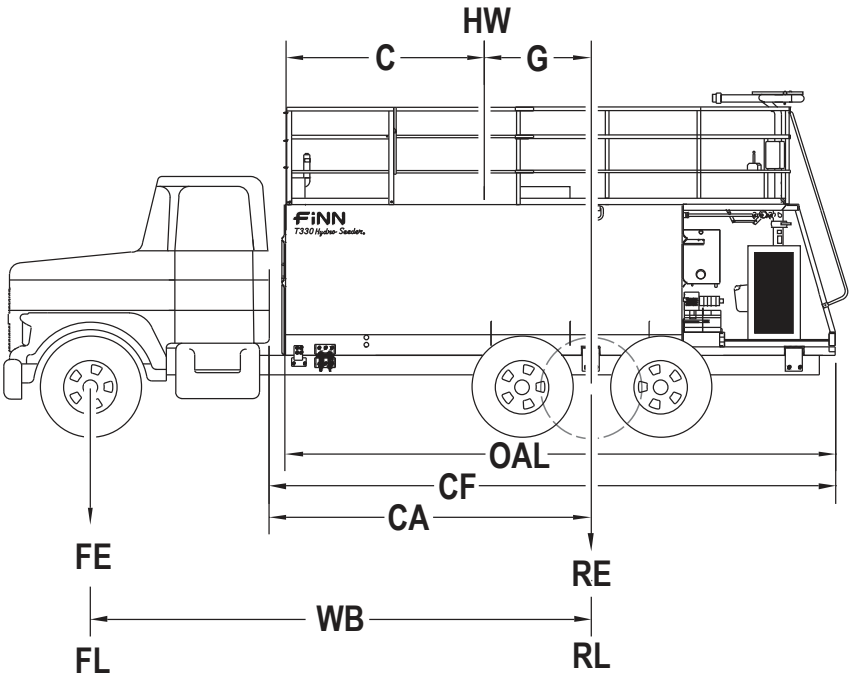

$$\frac{(WB \times FL) - (WB \times FE)}{HW} = G$$

$$\frac{WB \times (RE + HW - RL)}{HW} = G$$

G + C must be equal to or less than CA

$$\frac{(WB \times FE) + (G \times HW)}{WB} = FL$$

$$\frac{(WB \times RE) + HW \times (WB - G)}{WB} = RL$$

Figure 1 - Truck Mounting Calculations & Dimensions

GENERAL MOUNTING GUIDELINES:

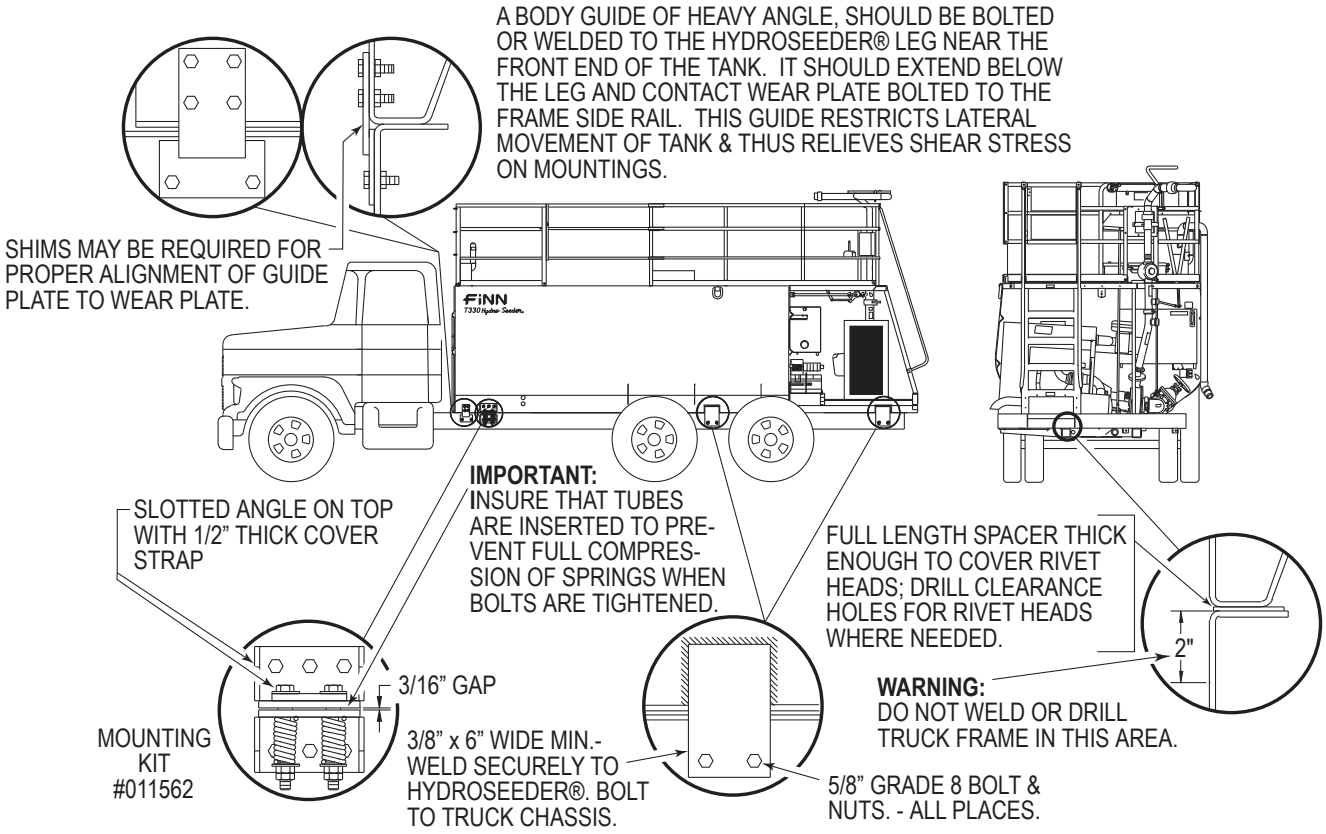

Figure 2 - General Truck Mounting Guidelines

Once the proper carrier has been selected, the HydroSeeder® must be securely mounted to it.

CAUTION: **Your FINN HydroSeeder® should be mounted by a qualified truck body installer.**

IMPORTANT: Mounting the HydroSeeder® to the truck must allow for tire clearance as well as frame twist. Place hard wood spacers along the length of truck rails or use Finn Spring Mounting Kit (#011562) or equivalent.

ATTACHMENTS:

1. Extension hoses for reaching remote areas are available in 50 ft. (15m) lengths. All connections are camlock quick operating fittings. The hose is connected to the end of the discharge boom in place of a nozzle. The nozzle is connected to the end of the hose and controlled by the person on the ground. The flow is controlled by a second person on the HydroSeeder®. This allows for a full pressure and volume operation.

CAUTION: **Since the extension hose will be seeing the full output of the pump with the recirculation closed, the equipment operator and individual at the end of the hose should exercise extreme care when operating unit on high pressure. The high pressure on the hose can exert strong forces causing hose operator to lose control of hose or footing. The hose will require additional holders on slopes. Engage the clutch only after the hose operator is firmly positioned and has firm control of hose.**

2. For lower pressure applications, or for close up work, i.e. around buildings, the remote valve attachment can be used. The attachment includes semi-rigid hose with quick disconnect fittings along with a hand held valve which fits the end of the hose and accepts the standard nozzle assemblies. The hose is connected to the outlet on the discharge pipe above the pump. The machine is run at 1/2 to 3/4 throttle and material is applied where desired.

DANGER: **The recirculation valve must be open when using a remote valve. If valve is not open, extreme heat will occur resulting in damage and/or bodily injury.**

3. Hose Reel. The live hose reel will mount on the HydroSeeder® or on the truck frame. The 200 foot capacity electric rewind reel will wind up and store empty hose. A pivoting feature provides three locking positions, enabling curb-side, 45 degree, and rear hose discharge. It is electrically connected to the HydroSeeder® battery. Optionally connection is also available with hydraulic power. The entire hose reel is protected by a UV-protective canopy.
4. Hardened Pump Parts. Pump casing, impeller, and suction cover are treated with special material designed to resist wear.
5. Rear Spray Bar. The spray bar option is not designed for slurry application but for the dispersion of liquids for dust control, watering, feeding and washing applications. Rear spray bar is arranged so that operation is remotely controlled from the truck cab.

6. Radio Remote Control. The radio remote control option provides the operator with pump on/off control, throttle control, and engine shutdown at the end of the hose. With control of the engine throttle, the operator can precisely adjust the pump flow to whatever output the situation requires (i.e., for close-up work around buildings). The ability to remotely shut off the pump allows the operator to close the recirculation valve for increased performance during hose work. Carrying the remote valve at the end of the hose becomes unnecessary.

NOTE: For remote pump on/off control, the clutch cylinder must be connected to an air supply.

6. Air Flush System. The air flush option uses compressed air to purge any remaining mulch slurry from the HydroSeeder® hose, the discharge boom and the recirculation piping. To maximize performance, all discharge plumbing should be purged after every load. The air flush system provides a quick and easy means of purging without the need to acquire a flush tank and an additional water supply.

PRE-START CHECK:

Safety check to insure operator safety:

1. Check condition of all mounting hardware securing HydroSeeder® to truck frame.
2. Make sure bag cutter is in place and secure.
3. Inspect that all railings are in place and secure.
4. Insure that all guards are in place.
5. With the ignition switch on, verify that the amber safety light under the operator's platform is flashing.

EQUIPMENT CHECK:

CAUTION: **Equipment check is made with the engine off and all rotating parts stopped.**

1. See that tool kit contains all the prescribed items (see tool list on page 78).
2. Inspect the "slurry-tank" for foreign objects. See #2 and #3 in Maintenance Section of the Safety Summary Section on page 4.
3. Check fuel level.
4. Check the hydraulic oil level (see hydraulic system for oil specifications).
5. Check engine oil level...for oil type refer to the engine manual.
6. Check fluid level in radiator.
7. Inspect air cleaner for dust and dirt, clean if necessary.
8. Secure the drain plug on the outside-bottom of the slurry-tank.
9. Check to be certain pump drain plug is in place.

10. Lubricate equipment - See Lube Chart on pages 28-29.
    A. Each lubrication point is marked.
    B. Check automatic pressure lubricator at pump. If the stem is fully extended with thumb nut all the way up then pressure lubricator contains lubricant - if not, lubricant must be replaced by the following procedure (See Figure 3):

        a) Turn thumb nut clockwise until stem rises to maximum height.
        b) Remove cap and fill cap with sodium (water soluble) base grease. (FINN part number 000698). Do not use lithium base (chassis lube) grease.
        c) Replace cap.
        d) Turn thumb nut counter-clockwise until the thumb nut is at the top of the stem. The spring and pressure disc in the lubricator forces the grease, under pressure, to the pump seal.

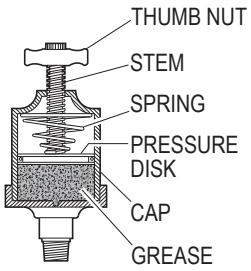

Figure 3
Pressure Lubricator

IMPORTANT: When the thumb nut has moved down to within 1/2" (1.25 cm) of touching the cap, reservice the automatic lubricator.

11. Engage and disengage clutch to determine if it "snaps" in and out.
12. Check and clean nozzle of obstructions.
13. Check pump discharge and recirculation valve handles for free movement.
14. Make sure all tank vents are clean and open. Do not plug or cap.

TWO VALVE OPERATION:

This HydroSeeder® is equipped with two independently operated plug valves to control slurry flow. One is located in the recirculation line below the platform, and the other is located in the discharge line above the platform. The valve handles should be positioned as shown in Figures 4-6 for the particular application required.

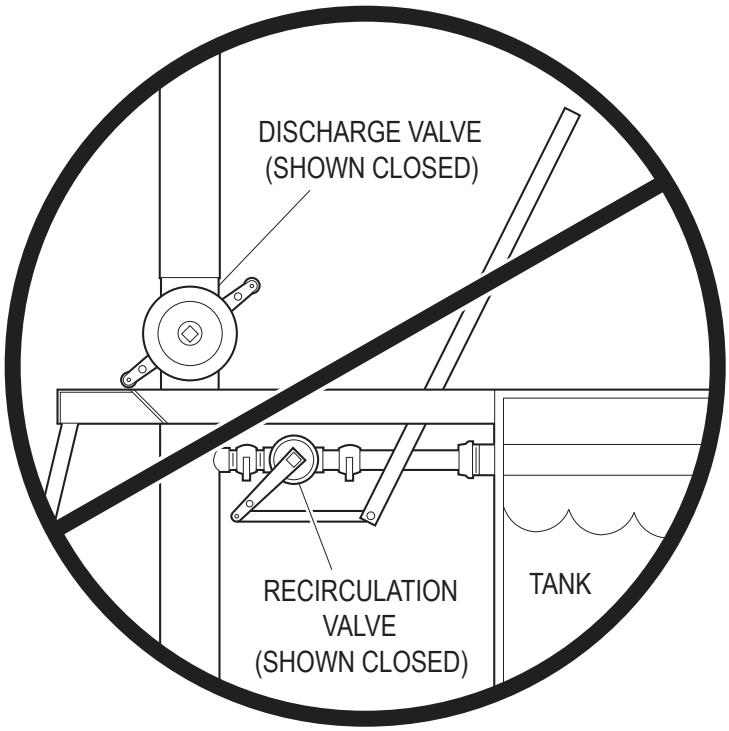

Figure 4 - DO NOT Engage Clutch

WARNING: **Never engage the slurry pump clutch when both valve handles are positioned as shown Figure 4. Both valves are closed and will result in extreme heat generation that will cause damage or bodily injury if the slurry pump is running.**

1. DISCHARGE THROUGH BOOM:

Flow is through boom with no flow through closed recirculation valve (Figure 5). Flow through boom is controlled by engaging and disengaging slurry pump clutch. Do not use the discharge valve to control distance. Valve should be completely open. Control the spray volume and spray distance by adjusting the engine RPM.

2. EXTENSION HOSE THROUGH BOOM:

Flow is through boom with no flow through closed recirculation valve (Figure 5). Extension hose is connected to boom and flow is controlled by engaging and disengaging pump clutch, or controlling the speed of the engine.

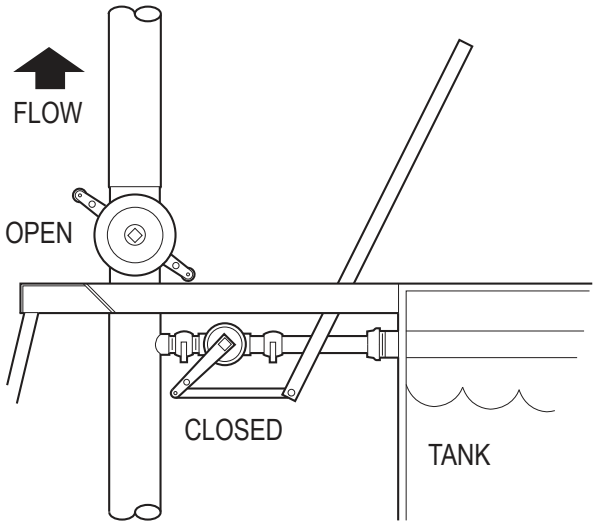

Figure 5 - Discharge Through Boom

DANGER: **Do not use remote valve in this application.**

3. EXTENSION HOSE OR HOSE REEL THROUGH REMOTE PORT:

Flow is through recirculation with no flow through closed discharge valve (Figure 6). Flow through hose is controlled by engaging and disengaging slurry pump clutch, or by remote valve at end of hose. Open recirculation valve allows flow back into tank when the remote valve is closed.

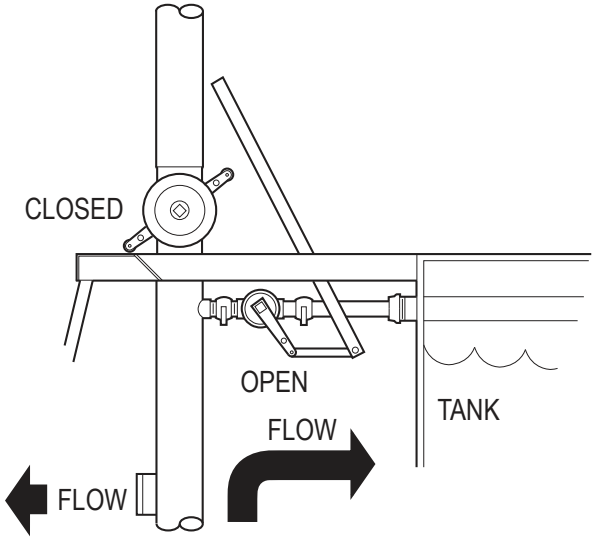

Figure 6 - Discharge Through Extension Hose or Hose Reel

DANGER: Recirculation valve must be open and material flowing back into tank when using a remote valve. A closed or plugged recirculation line will cause extreme heat resulting in damage and/or bodily injury.

STARTING PROCEDURE:

CAUTION: **See safety section of the manual (pages 2-4) before operating the machine.**

Before starting, open the recirculation valve, close discharge valve and recirculation valve (if applicable), disengage clutch, and place the agitator control in the neutral position.

1. Set throttle about 1/4 open.
2. Turn the key clockwise until the starter engages, and the engine starts.
3. Allow engine to warm up for 3 to 5 minutes.

NOTE: This engine has a safety system which will shut the engine off if the engine oil pressure drops below 7 PSI. or if the water temperature reaches 230˚ Fahrenheit (110˚ Centigrade).

POWERVIEW

The PowerView is a multifunctional tool that enables the operator to view many different engine parameters and service codes. A graphical back-lit LCD screen can display either a single parameter or a quadrant display showing four parameters simultaneously. Diagnostic capabilities include fault codes with text translation for the most common fault conditions.

The following relative engine parameters can be displayed in either English or Metric units, as well as in Spanish, French, or German:

- Engine RPM
- Engine Hours
- System Voltage
- % Engine Load at Current RPM
- Coolant Temperature
- Oil Pressure
- Throttle Position
- Active Service Codes

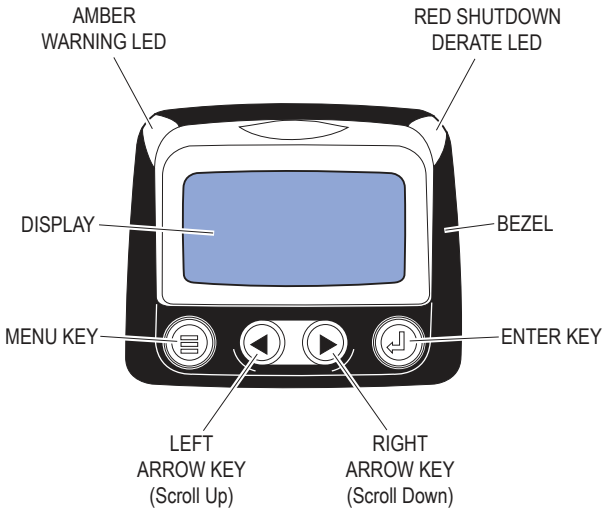

FIGURE 7 - FACEPLATE FEATURES

FACEPLATE

The keypad on the PowerView is a capacitive touch sensing system. There are no mechanical switches to stick or wear out. It operates in extreme temperatures, with gloves, through ice, snow, mud, grease, etc. When the key is touched, feedback is provided by flashing the screen. The keys on the keypad perform the following functions (refer to Figure 7):

Menu Key
The Menu Key is used to either enter or exit the menu screens.

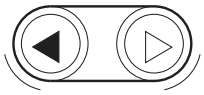

Left Arrow Key
The Left Arrow Key is used to scroll through the screen, either moving the parameter selection towards the left or upward.

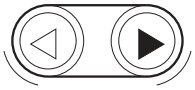

Right Arrow Key
The Right Arrow Key is used to scroll through the screen, either moving the parameter selection towards the right or downward.

Enter Key
The Enter Key is used to select the parameter that is highlighted on the Screen.

POWERVIEW OPERATION

PowerView Menus (First Time Start Up)

1. Once the engine has been started and the key-switch is turned to "RUN", the RPM Engine Parameter is displayed. See Figure 8.
2. To toggle through the various engine parameters, touch either the left or right arrow key.
3. To switch to the "4-Up Display", touch the Menu Key to display the first seven items of the Main Menu. See Figure 9.
4. Since the first menu item listed is "Go To 4-Up Display", touch the Enter Key to select the four parameter display.

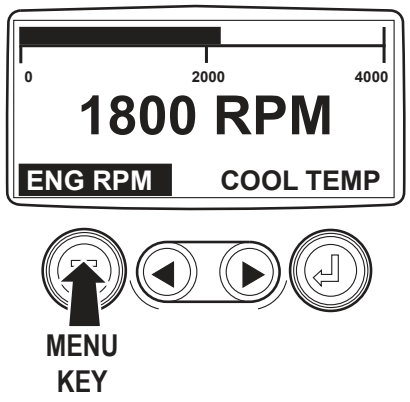

Figure 8 - 1-Up Display

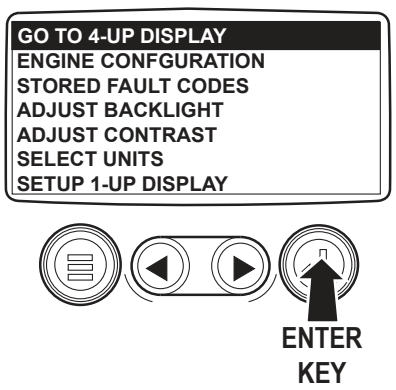

Figure 9 - Main Menu

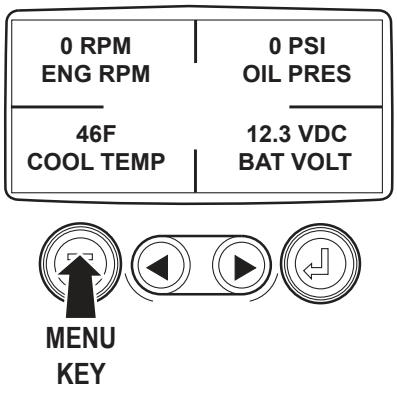

Figure 10 - 4-Up Display

Stored Fault Codes

The PowerView Display will store any fault codes generated by the engine and display them along with a text description. To access these fault codes:

1. Touch the Menu Key to display the Main Menu.
2. Using the Right Arrow Key, toggle down the list until "Stored Fault Codes" is highlighted. See Figure 11.
3. Touch the Enter Key to view any stored fault codes. The display will respond by presenting a "Requesting Fault Codes" message while the system retrieves the codes. See Figure 12.
4. Once the stored fault codes have been retrieved, the initial code will be displayed along with a text description. See Figure 13.
5. If the word "MORE" appears at the bottom of the display, this indicates that there are additional fault codes being stored. Use the Right Arrow key to advance to the next code.
6. As long as the arrow appears to the right of the word "MORE" as you advance through the fault codes, this means there are more codes available for viewing. When the arrow shifts to the left of the word "MORE", this is an indication that you have accessed the final fault code being stored. At this point you can touch the Left Arrow Key to review the fault codes or touch the the Menu Key to return to the Main Menu.

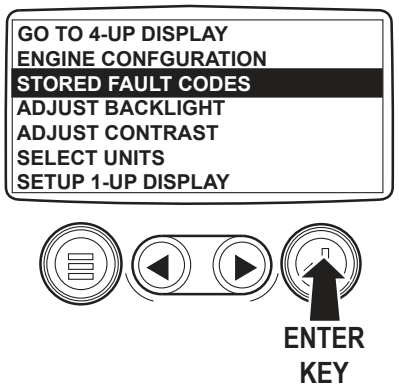

Figure 11 - Main Menu

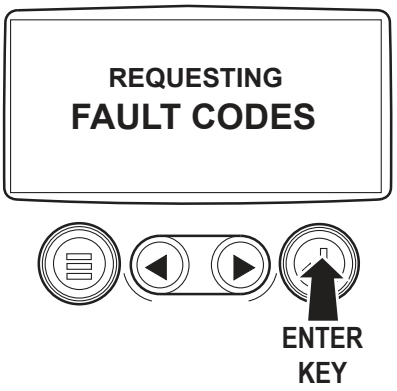

Figure 12 - Access Stored Fault Codes

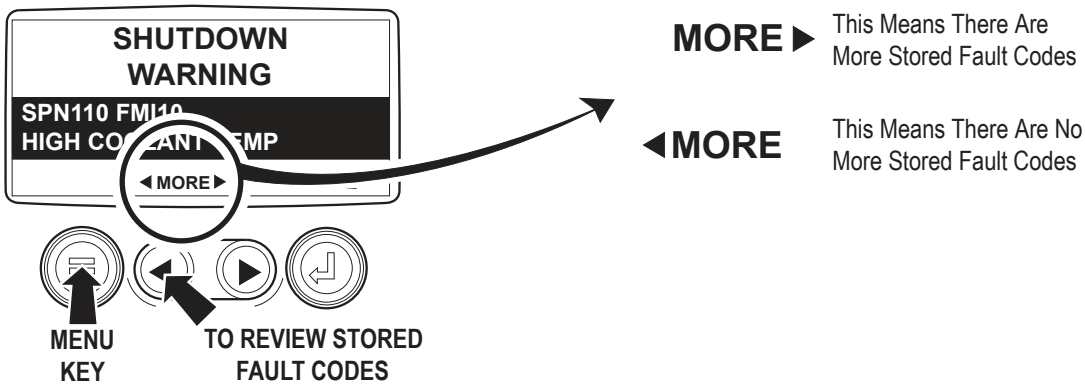

Figure 13 - Stored Fault Codes

AREA COVERAGE - MATERIAL CAPACITY:

To determine the coverage per load for any HydroSeeder®, three questions must be answered prior to the application. First, is the job to be done “one step” (which is when the seed, fertilizer and mulch are applied proportionally per load) or “two step” (which is when the seed and fertilizer are applied alone and then covered by mulch as a second operation)? Second, at what rates (usually in pounds per 1,000 square feet, or pounds per acre) are the seeding materials to be applied? Finally, what are the loading capacities of the HydroSeeder®?

Application rates vary for different geographic locations, but in general, seed is applied at 6-10 pounds per 1,000 square feet; fertilizer is applied at a rate of approximately 400 pound per acre; and fiber mulch is applied at 1,500 to 2,000 pounds per acre. (Note: There are 43,560 square feet in an acre). Local agronomists, agricultural extension agents, or soil and water conservation officials should be contacted for more specific information on application rates for a given area.

The following tables show loading versus coverage rates for the Finn HydroSeeder®. Table A shows rates for "one step" applications. The coverage area is determined by the fiber mulch capacity of the HydroSeeder®, and the rate at which it is applied. Table B shows the area coverage when seeding only, where little or no mulch is applied. The coverage area is determined by the granular solids capacity of the HydroSeeder®, and the rate at which the solids are applied.

TABLE A - Using Seed, Fertilizer and Mulch

Unit	Amount of Material in Tank (pounds(kilograms))			Coverage Area (sq. ft.(sq. m.))
	Seed	Fertilizer	Mulch	
T280	287 (130)	333(151)	1,250 (567)	36,300 (3,372)
T330	345 (156)	400 (181)	1,500 (680)	43,560 (4,046)

Above Table is based on 1,500 pounds of mulch, 400 pounds of fertilizer and 345 pounds of seed (8 pounds/1,000 sq. ft.) per acre.

Table A Example: For T330 (1,500 pounds Mulch per Tank)

$$\frac{\text{1,500 pounds Mulch per Tank}}{\text{1,500 Pounds Mulch per Acre}} = \text{1 Acre per Load}$$

400 Pounds Fertilizer per Acre x 1 Acre = 400 Pounds Fertilizer per Load
345 Pounds Seed per Acre x 1 Acre = 345 Pounds Fertilizer per Load

TABLE B - Seed & Fertilizer Only

Unit	Amount of Material in Tank (pounds(kilograms))			Coverage Area (sq. ft.(sq. m.))	
	Seed	Fertilizer	Total	(sq. ft. (sq. m.))	Acerage (Hectare)
T280	3,136 (1,422)	3,600 (1,633)	6,736 (3,055)	392,040 (36,420)	9 (3.64)
T300	3,485 (1,580)	4,000 (1,814)	7,485 (3,395)	435,600 (40,467)	10 (4.04)

Above Table is based on rates of 8 pounds seed and 9.2 pounds fertilizer per 1,000 sq. ft.

Table B Example: For T330

$$\frac{\text{7,485 Pound Tank Capacity (Solids)}}{\text{8 Pounds (Seed) + 9.2 Pounds (Fertilizer) per 1,000 Sq. Ft.}} = \text{435,600 Square Feet per Load}$$

$$\frac{\text{8 Pounds Seed}}{\text{1,000 Sq. Ft.}} \text{ x 435,600 Square Feet = 34,852 Pounds Seed per Tank}$$

TITAN280		
Gallons (Liters)	in. (cm) from top of load hatch	in. (cm) from bottom
2750 (10410)	8 (20.3)	58.5 (148.6)
2700 (10220)	11.75 (29.8)	54.75 (139.1)
2600 (9840)	13.75 (34.9)	52.75 (134)
2500 (9465)	15.5 (39.4)	51 (129.5)
2400 (9085)	17.75 (45.1)	48.75 (123.8)
2300 (8705)	19.5 (49.5)	47 (119.4)
2200 (8325)	21.25 (54)	45.25 (114.9)
2100 (7950)	23.25 (59)	43.25 (109.9)
2000 (7570)	25 (63.5)	41.5 (105.4)
1900 (7190)	26.75 (67.9)	39.75 (101)
1800 (6815)	28.75 (73)	37.75 (95.9)
1700 (6435)	30.75 (78.1)	35.75 (90.8)
1600 (6055)	32.5 (82.6)	34 (86.4)
1500 (5675)	34.25 (87)	32.25 (81.9)
1400 (5300)	36 (91.4)	30.5 (77.5)
1300 (4925)	38 (96.5)	28.5 (72.4)
1200 (4545)	39.75 (101)	26.75 (67.9)
1100 (4165)	41.75 (106)	24.75 (62.9)
1000 (3785)	43.25 (109.9)	23.25 (59.1)
900 (3405)	45 (114.3)	21.5 (54.6)
800 (3025)	47 (119.4)	19.5 (49.5)
700 (2650)	49 (124.5)	17.5 (44.4)
600 (2270)	50.75 (128.9)	15.75 (40)
500 (1890)	52.5 (133.4)	14 (35.6)
400 (1515)	54.5 (138.4)	12 (30.5)
300 (1135)	56.75 (144.1)	9.75 (24.8)
200 (755)	59 (149.9)	7.5 (19.1)
100 (375)	61.5 (156.2)	5 (12.7)

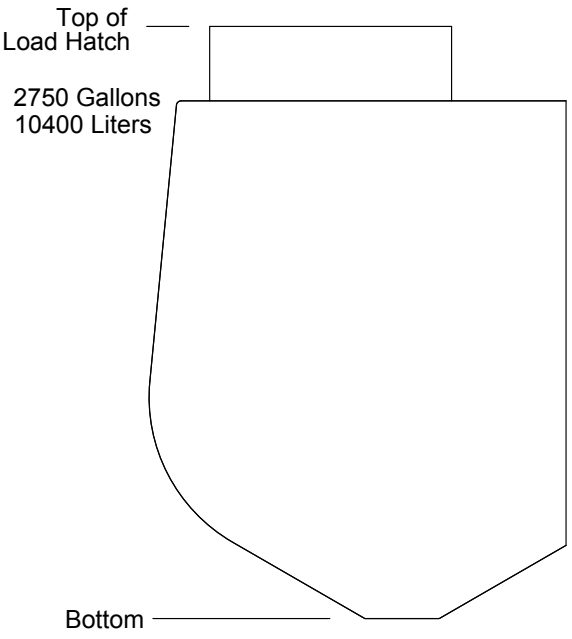

TITAN330		
Gallons (Liters)	in. (cm) from top of load hatch	in. (cm) from bottom
3300 (12490)	9 (29.9)	58.5 (148.6)
3200 (12115)	13.25 (33.7)	54.25 (137.8)
3100 (11735)	14.75 (37.5)	52.75 (134)
3000 (11360)	16.5 (41.9)	51 (129.5)
2900 (10975)	18 (45.7)	49.5 (125.7)
2800 (10600)	19.75 (50.2)	47.75 (121.3)
2700 (10220)	21.25 (54.0)	46.25 (117.5)
2600 (9840)	22.75 (57.8)	44.75 (113.7)
2500 (9465	24.5 (62.2)	43 (109.2)
2400 (9085)	26 (66.0)	41.5 (105.4)
2300 (8705)	27.5 (69.9)	40 (101.6)
2200 (8325)	29 (73.7)	38.5 (97.8)
2100 (7950)	30.75 (78.1)	36.75 (93.3)
2000 (7570)	32.25 (81.9)	35.25 (89.5)
1900 (7190)	33.75 (85.7)	33.75 (85.8)
1800 (6815)	35.25 (89.5)	32.25 (81.9)
1700 (6435)	36.75 (93.3)	30.75 (78.1)
1600 (6055)	38.25 (97.2)	29.25 (74.3)
1500 (5675)	39.75 (101.0)	27.75 (70.5)
1400 (5300)	41.25 (104.8)	26.25 (66.7)
1300 (4925)	42.75 (108.6)	24.75 (62.9)
1200 (4545)	44.25 (112.4)	23.25 (59.1)
1100 (4165)	45.75 (116.2)	21.75 (55.2)
1000 (3785)	47.75 (121.3)	19.75 (50.2)
900 (3405)	49 (124.5)	18.5 (47)
800 (3025)	50.25 (127.6)	17.25 (43.8)
700 (2650)	52 (132.1)	15.5 (39.4)
600 (2270)	53.5 (135.9)	14 (35.6)
500 (1890)	55.25 (140.3)	12.25 (31.1)
400 (1515)	57 (144.8)	10.5 (26.7)
300 (1135)	58.75 (149.2)	8.75 (22.2)
200 (755)	60.5 (153.7)	7 (17.8)
100 (375)	63 (160.0)	4.5 (11.4)

Figure 14 - Tank Capacity Chart

LOADING (FOR WOOD FIBER MULCH, IF LIMING SEE PAGE 21):

CAUTION: **Take care not to lose pens, lighters, etc. from shirt pockets or drop pieces of paper or plastic bags into the tank, as these might plug the slurry system.**

1. With clutch disengaged and agitator control in the neutral position, start engine and allow it to warm up (See starting procedure page 12).
2. Start filling the unit with water. When water reaches the top of the agitator shaft, move agitator control to full reverse position.

   Fill the tank with water from any stream or pond using a fill pump. When filling from a pond or stream be sure to use a suction strainer to filter out contaminants which could damage the pump and unit. Other sources of water:

   1. Any pressure source, eg. fire hydrant. This unit is supplied with a 6" air gap fill port but it is necessary to consult with local authorities before using water main, in order to abide to all local ordinances.
   2. Water tanker.
3. Piping System Cleanout Procedure (Purging Line):
   A. Remove discharge nozzle and gasket from discharge boom.
   B. Aim discharge boom assembly into an open area away from any persons, obstructions or high voltage power lines.
   C. Open discharge valve and close recirculation valve.
   D. Increase engine speed to approximately 1/2 to 3/4.
   E. Engage clutch with a firm snap. Do NOT slip clutch.
   F. When discharge stream is clear flush the hose on the reel (if applicable), open recirculation valve and close discharge valve. After recirculation stream is clear disengage clutch.
   G. Replace nozzle and gasket in discharge boom.
4. Continue filling tank with water.
5. Increase engine speed to full RPM. Governed speed of the engine on the Finn HydroSeeder® should be 2,550 to 2,600 RPM under load.
6. Start loading dry material, loading the lightest material first. Agitator control should be in full reverse for mixing.
   A. Seed - Cut the seed bag and dump contents into the slurry tank. (When using inoculant, add it in the tank along with the seed.) When using quick swelling seeds load them just prior to application.
   B. Wood Fiber Mulch - Empty the entire bag in or cut bag and drop in the sections of fiber. The amount of mulch to be used should be loaded by the time the water level is at 3/4 full. If agitator stalls or a high pitch squeal comes from the hydraulic system, reverse agitation to forward for a moment to clear the obstruction, then return agitation to reverse.

CAUTION: **Hydraulic system will overheat if agitator shaft is jammed for extended period. This will damage hydraulic oil and system components.**

C. Fertilizer - Stand over hatch opening and drop the bag onto the bag cutter. Grasp both ends of the bag and dump material.

D. All other additives - Consult with manufacturer for proper loading technique.

7. When all materials are loaded and in suspension, and the tank is full, move the agitator to neutral then full speed forward to insure all material is mixed. It may be necessary to change the agitator direction more than once to insure a thorough mixture.
8. After material is thoroughly mixed, slow agitator in forward direction to 1/2 to 3/4 speed or enough to create movement in all of the corners of the tank. Do not over agitate the slurry. Always discharge the material with the agitator control in forward position.
9. Close the hatch lid on the slurry tank.

NOTE: The slurry should not be recirculated for more than 15 minutes prior to discharge to reduce wear and keep seed from swelling.

NOTE: If foaming occurs, reduce agitator speed.

PRIOR TO APPLICATION:

1. Operator should familiarize self with area to be seeded and develop a plan to insure uniform application.
2. Develop a plan for communication between operator and driver of the carrying or towing vehicle to signal for start, stop, turn, etc. through the use of the signal horn.
3. Operator takes up position on the platform. From this point application will be controlled by the use of the clutch, valve, discharge assembly and throttle.

DISCHARGE NOZZLE SELECTION:

Nozzles are stored in the tool box. This HydroSeeder® is equipped with 6 nozzles - two long distance and four ribbon fan nozzles. The smaller long distance nozzle is generally better suited for seed, fertilizer and/or lime application while the large long distance nozzle is better for wood fiber mulch application. All of the ribbon fan nozzles are generally suited for both types of application.

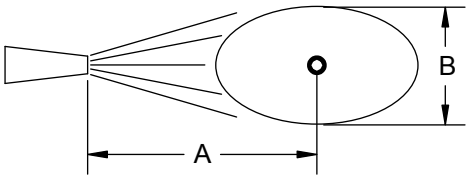

Figure 15 - Nozzle Spray Dimensions

Nozzle	Part Number	Distance (A)	Width (B)	T330 Discharge Time
Lg. Long Distance	011775	Up to 230 ft (70m)	-	7.5 min.
Sm. Long Distance	011703	Up to 150 ft (46m)	-	30 min.
Sm. Narrow Ribbon	011707	Up to 75 ft (23m)	15 ft (4.6m)	30 min.
Sm. Wide Ribbon	011706	Up to 45 ft (14m)	25 ft (7.6m)	30 min.
Lg. Narrow Ribbon	011891	Up to 90 ft (28m)	23 ft (7m)	10.6 min.
Lg. Wide Ribbon	011890	Up to 50 ft (15m)	35 ft (10.5m)	10.6 min.

NOTE: T280 discharge times will be slightly shorter.

APPLICATION OF SLURRY:

I. GENERAL APPLICATION TECHNIQUES

DANGER: **Do not spray toward power lines, transformers or other high voltage conductors.**

CAUTION: **The driver of the carrying vehicle should remain alert for hazards to the operator, such as low power lines, hanging branches, etc. Driver should never start or stop abruptly.**

1. Determine which nozzle would best suit the application needs according to the nozzle selection chart on page 18.
2. Application of seed, fertilizer and lime: Elevate discharge nozzle no less than 10˚ above the area to be sprayed, allowing the slurry to gently rain onto the seed bed.
3. Application of wood and paper fiber: Whenever possible aim the stream towards the ground to create a surface with small pock marks which help get seed in contact with ground. Do not allow the stream to blast away the surface of the seed bed.
4. Generally the most remote area of the seed bed should be covered first. Distance is controlled by engine speed and nozzle selection. Do NOT partially close the valve to control the distance.
5. While moving along area to be seeded, the operator should move the nozzle back and forth in a slow, even arc.
6. If application is to be interrupted for a short period of time, disengage the clutch. If shutdown is going to be for an extended period of time (i.e., lunch break, reloading, etc.), close the valves to prevent slurry from dewatering. Re-engage the clutch to continue application.
7. It may be necessary to slow the agitator as the tank empties to reduce foaming.

II. DISCHARGE THROUGH THE BOOM:

1. Move the discharge valve handle to the open position, the recirculation valve handle to the closed position, and engage the clutch. At this time, should the operator want to stop spraying for a short period, disengage the clutch; then re-engage to continue spraying.
2. When the tank is empty, or when discontinuing discharge for an extended period of time, disengage the clutch, then immediately move the discharge valve to the closed position, and idle the engine. This will maintain moisture in the discharge piping and help prevent plugging. Move the agitator control to the neutral position.

III. PROCEDURES WHEN USING HOSES:

Always pump clear water through the hose before pumping mulch. If the inside hose liner is dry, it will dewater the mulch causing plugging.

A. PUMP TAKE OFF SYSTEM OR HOSE REEL WITH REMOTE VALVE :

1. Open recirculation valve and close discharge valve and close remote valve at the end of the hose.
2. Engage clutch. When stream is flowing freely through the recirculation line, open the pump take off valve.

CAUTION: **The high pressure on the hose can exert strong forces causing hose operator to lose control of hose or footing. The hose will require additional holders on slopes. Open the pump take off valve and the remote valve slowly and only after the hose operator is firmly positioned and has firm control of hose.**

3. With the engine at approximately 2,000 RPM, open the remote valve at the end of the hose to discharge the load.
4. When finished spraying, close the remote valve, disengage the clutch, and stop the engine. If using fiber mulch, retain as much water as possible in the hose by elevating the ends or by coupling the ends together.
5. If another load is to be done, see reloading procedure on page 21. If finished for the day, follow the clean up procedure and flush out the hose.

DANGER: **The recirculation valve must be open when using a remote valve. If not open, extreme heat generated by dead-head pump which will cause damage and/or bodily injury will occur.**

B. EXTENSION HOSE SYSTEM - WITHOUT REMOTE VALVE:

1. Connect the extension hose into the end of the discharge boom.
2. A person controlling the end of the hose directs a second operator at the machine to control the clutch and adjust the engine speed.

CAUTION: **Since the extension hose will be seeing the full output of the pump with the recirculation closed, the equipment operator and individual at the end of the hose should exercise extreme care when operating unit on high pressure. The high pressure on the hose can exert strong forces causing hose operator to lose control of hose or footing. The hose will require additional holders on slopes. Engage the clutch only after the hose operator is firmly positioned and has firm control of hose.**

3. When hose operator is ready, signal the second operator to engage clutch and slowly increase the engine RPM until the desired discharge pressure is reached.
4. When finished spraying, disengage the clutch, stop the engine, and close the discharge valve. If using fiber mulch, retain as much water as possible in the hose by elevating the ends or by coupling the ends together.
5. If another load is to be done, see reloading procedure on page 21. If finished for the day, follow clean up procedure and flush out the hose.

C. HOSE WORK WITH RADIO REMOTE:

1. Begin with the engine around 1/4 throttle (1,400 RPM).
2. Close recirculation valve. If using an extension hose connected to the discharge boom, open the discharge valve. If using the hose reel, close the discharge valve and open the pump take off valve to the hose reel.
3. Switch Remote On/Off switch on the control panel to the "ON' position.
4. When the operator is in position, engage the pump using the remote transmitter and increase throttle to the desired output.

IMPORTANT: To quickly shut off the engine at any time, press the red "E-Stop" button on the transmitter. To restart the engine, the key switch on the control panel must be returned to the "OFF" position and then re-started.

5. When finished spraying, turn the pump off and decrease the engine throttle to idle.

CAUTION: **When using the radio remote control option, the secondary operator(s) must be aware that the machine can be activated remotely at any time after the Remote On/Off switch on the control panel is switched ON. If any maintenance or troubleshooting needs to be performed while the engine is running, the Remote On/Off switch must be in the off position.**

RELOADING PROCEDURE:

1. Start at step 2 in loading procedure on page 17.
2. After last load of the day refer to the cleaning and maintenance section of the manual on pages 26-35.
3. If the unit is equipped with an Air Flush System, refer to the Air Flush System Parts & Operator's Manual.

LIMING WITH THE HYDROSEEDER®:

In using large concentrations of granular solids through the HydroSeeder®, it is advisable to keep the slurry moving through the pump at all times. This keeps the solids from settling in the lines, and creating a stoppage. This unit was designed for the application of agricultural grade lime only.

PROCEDURE:

1. With clutch disengaged and agitator control in neutral position, start engine and allow it to warm up (see starting procedure on page 12).
2. Start filling the unit with water. When water reaches the top of the agitator shaft move agitator control to approximately 1/2 speed reverse.
3. Open both the recirculation and discharge valves.
4. Remove the discharge nozzle and gasket from the discharge boom.

5. Aim the discharge boom assembly into an open area away from any persons, obstructions or high voltage power lines.
6. Move the throttle to approximately 1/2 engine speed.
7. Engage the clutch, and move the throttle to full engine speed. A stream of water should be coming from the end of the recirculation pipe beside the hatch opening, as well as from the boom.
8. As soon as both streams are clear, close the discharge valve and make sure water is being recirculated back to the tank.
9. Decrease throttle to 3/4 speed. Increase agitator speed to full reverse. **DO NOT DISENGAGE CLUTCH!**
10. 20 pounds of granular solids displaces approximately 1 gallon of water. When filling the tank with water, the volume of granular solids must be accounted for. For example; If using the T280 maximum recommended capacity of 8,000 pounds, 400 gallons (8,000/20 = 400) would have to subtracted (2,750 gallons - 400 gallons = 2,350 gallons). For the T330 maximum recommended capacity of 10,000 pounds, 500 gallons (10,000/20 = 500) would have to be subtracted (3,300 gallons - 500 gallons = 2,800 gallons).
11. Fill the tank to the required capacity for the rate of granular solids to be applied.
12. Load the material (see "Loading" pages 17-18, steps 5-8).
13. When ready to apply slurry, install gasket and nozzle into boom.
14. Move agitator control to 3/4 speed, forward.
15. With the clutch still engaged, open the discharge valve.

CAUTION: **To decrease pump wear and increase discharge distance, it may now be desirable to close the recirculation valve. However, the recirculation valve must be open BEFORE closing the discharge valve if the application of slurry is to be interrupted. Extreme heat, which will cause damage and/or bodily injury, will occur if both valves are closed.**

16. Apply the slurry (see "Application of Slurry" pages 19-21).
17. If another load is to be applied, start again at step "1". If finished, follow the clean-up procedure.

TROUBLESHOOTING YOUR HYDROSEEDER®:

Because of the tremendous work load usually placed upon the HydroSeeder®, minor malfunctions will occur from time to time. If these are not remedied immediately, they could lead to poor performance and damage to the equipment. This section describes possible problems and the action to correct them.

1. Foam in the tank and air entrainment.

   The mixture of dry materials with water will sometimes cause excessive foaming while others will cause air entrainment. This is noticed primarily in the erratic discharge and a drop in pressure and distance.

Some solutions are:

A. As the slurry level drops in the tank, slow the agitator.
B. Add 2 or 3 ounces (4 to 6 cl) of an antifoaming agent to the tank.
C. If you can determine which additive is causing the air problem, either add it last or not at all.

D. Limit recirculation time as much as possible.

E. Open pump suction bleed valve to exhaust air trapped in the pump or suction line. Close valve as soon as the air stops.

2. Plugging or clogging:

DANGER: **Turn off engine and disconnect battery cables before working on equipment. Serious injury or death can result from moving parts or high pressure spray.**

Sometimes when a stoppage occurs, you will not be able to find anything in the line. When this happens, it means that the system became airbound instead of plugged. To remedy this, see "Foaming". Plugging can occur in any one of four places; the valve and recirculation nozzle, the discharge nozzle, the pump area and the sump area. The plugging is caused by either foreign objects or dewatered mulch.

A. Obstruction in the discharge nozzle is determined by a change or stoppage of the spray pattern.

a) Disengage clutch.

b) Make certain that the pump has stopped rotating.

c) Remove the nozzle, slowly and carefully.

d) Clear the nozzle with the nozzle cleaning rod attached to the nozzle tray.

DANGER: **Severe injury can result from opening clamps when piping is hot. Before loosening any clamps, determine if the pipe is hot. If so, let it cool before attempting repair.**

B. If the recirculation system is not working:

a) Disengage the clutch and shut down the engine.

b) Remove the two clamps on each side of the recirculation valve.

c) Slide the rubber seals back and remove the valve assembly.

d) Check the valve assembly, the recirculation nozzle in the discharge pipe, and the recirculation pipe going into the tank. Clear any obstructions.

e) Replace valve assembly and slide the seals back into place. Lubricate the outside of the seals.

f) Replace the clamps.

3. Obstruction in the pump, which can be determined by a drop in pressure. If the drop in pressure is accompanied by a frothy or whitish discharge stream, the blockage is in the suction line or sump area. To clear the pump:

A. Disengage the clutch and stop the engine.

B. Loosen the suction pipe clamps. If there is material in the tank, shut off the suction line valve

C. Remove the clamp closest to the pump.

NOTE: If no water comes out, it means that the obstruction is in the sump area.

E. Reach into the pump and remove the obstruction. If it is jammed, the pump suction cover may have to be removed.

F. Reassemble removing pipe "plug" in process.

G. Open suction line valve.

4. Obstruction in the sump area, which is located at the bottom of the tank on the inside where the suction pipe is attached:
    A. The easiest way to clear the sump is to back flush through the discharge plumbing with the water supply hose.
    B. Another method is to remove the drain plug and run a long pole through the opening and into the sump area. Remove the obstruction and replace the drain cap.
    C. Use a pipe or pole through the loading hatch opening to dislodge the obstruction.

TROUBLESHOOTING YOUR HYDROSEEDER®:

Problem	Probable Causes	Suggested Solutions
LEAKS:		
Tank Bearing	Lack of lubrication - seal worn Bolts not tightened properly	Replace seal and follow lube schedule Tighten uniformly to 25 ft. lbs
Pressure Pipe Clamps	Rubber seal cracked, pinched or torn	Replace, always grease seal before clamping shut
Suction Pipe Clamps	Rubber seal cracked, pinched or torn	Replace, always grease seal before clamping shut
Discharge Swivels	Not greased often enough	Rebuild swivels w/repair kit (part #12397, quantity 2 required)
Pump Shaft	Pressure lubricator not serviced	Replace pump seal, service pressure lubricator daily
Pump Suction Cover	Cover O-Ring bad	Replace cover O-Ring, use grease when replacing
Discharge Boom or Nozzle Camlock Fittings	Worn or no gasket	Replace gasket
MACHINE JUMPS DURING OPERATION:		
Agitator	Agitator bent by heavy object falling on it	Straighten agitator or shim, so it runs true
Bent Paddles	Loading wood fiber mulch into tank before tank is half full	Straighten agitator paddle, realign agitator to run true
FOAMING OF SOLUTION AND LACK OF DISTANCE:		
Pump loses prime - lacks distance - leaves excessive amount in tank (100 gal (378 liters) or more)	Sucking air in suction lines	Check all suction connections to see that rubber seals are in good shape. Grease seals before replacing clamps.
	Air entrainment	See page 22
	Low engine RPM (Below	Check PowerView Fault Codes
	2,700 RPM-No load)	See authorized engine dealer
	Soft water	Slow the agitator

TROUBLESHOOTING YOUR HYDROSEEDER®:

Problem	Probable Causes	Suggested Solutions
Pump loses prime - lacks distance - leaves excessive amount in tank (100 gal (378 liters) or more)	Too much agitation	Slow the agitator
	Pump worn	Reset pump tolerance page 32
	Suction partially plugged	Clean out machine see pages 26-27
	Nozzle worn or plugged	Clean nozzles, replace if necessary
	Fertilizer	Change type
	Clutch slippage	Readjust clutch - see clutch manual
VALVE:		
Valve stuck	Frozen	Thaw out ice & lubricate - leave in discharge position during storage
Constant plugging during operation	Foreign material in slurry	Drain and clean out tank - check storage for foreign materials
Constant plugging during loading and discharging	Loading HydroSeeder® before tank is half full of water	Reinstruct your operator - see pages 17-18
	Incorrect loading procedure	See loading procedure pages 17-18
	Improper operation by operator	Reinstruct your operator - Review Operator's Manual)
	Clutch slipping	Readjust clutch see manual
	Not moving valve handle far enough	Valve should be fully open
	Machine not being flushed out prior to reloading	See page 17
	Machine not being run at correct RPM during loading	Reinstruct your operator - see page 17
Extension hose plugs after use	Letting water run out, leaving wood fiber mulch to dry out	If hose has to be uncoupled, seal ends to keep water in hose and prevent wood fiber mulch from drying out
CLUTCH:		
Does not pull load or overheats	Out of adjustment	Readjust clutch, instructions in manual
Jumps out of engagement	Too loose or too tight	Readjust clutch - see manual
PUMP:		
Excessive wear	Fertilizer with highly abrasive fillers	Change fertilizer - avoid abrasive fillers
	Overloading machine with dry material	Load machine to recommended capacities
	Too much time allowed between loading and discharging	After loading and mixing has been completed, set agitator at 1/2 speed in reverse and disengage pump
	Recirculating all the time	Close recirculation valve when discharging through the boom

TROUBLESHOOTING YOUR HYDROSEEDER®:

Problem	Probable Causes	Suggested Solutions
PUMP CONT'D:		
Will not turn	Frozen	Warm housing to melt ice
	Jammed with fertilizer or lime	Remove cover and clean interior
	Impeller rusted to suction cover plate	Pull cover and remove rust

CAUTION: **Do not turn the shaft backwards with a pipe wrench - this will unscrew the impeller from the shaft. Consequently, when clutch is engaged, the impeller will screw onto the shaft with such force, great enough to break the impeller.**

CLEANING AND MAINTENANCE:

AFTER FIRST 4 - 8 HOURS OF OPERATION:

1. Check and adjust clutch - see clutch manual.

DAILY:

1. Cleaning the HydroSeeder®
   A. Fill the slurry tank to the center of the agitator shaft.
   B. Move agitator lever to full speed to flush off inside of tank top and walls.
   C. Remove discharge nozzle and gasket from discharge boom.
   D. While pointing discharge toward an open area, move discharge valve handle to discharge position and engage clutch. Allow to discharge until clear water is coming out.
   E. Move recirculation valve handle to recirculation and allow to run momentarily.
   F. Disengage clutch, idle the engine, move valve handle to discharge position, move agitator handle to neutral and turn off the engine.
   G. Always remove the drain plug and allow the tank to drain.
   H. In freezing weather leave main tank drain plug out and remove pump drain plug. Move all slurry valves to open position.
   I. Wash the outside of the HydroSeeder®, including the radiator, to remove any corrosive materials.
   J. If using lime - the daily maintenance should be performed after every load.
   K. Clean out extension hoses.
   L. Make sure all tank vents are clean and open. Do not plug or cap.
2. Lubricating the HydroSeeder® (See lube chart pages 28-29)

IMPORTANT: Lubrication should be performed IMMEDIATELY AFTER cleaning of equipment. Engine not running.

A. Lubricate the agitator shaft bearings located on the outside front and rear of the slurry-tank.

B. Service the automatic lubricator on the pump as needed (for service see page 10).

C. Check the engine oil and replenish when necessary. Change oil and filter after first 100 hours then 250 hours thereafter. Consult the engine operator's manual for the correct grade of oil and the engine break-in procedure.

D. Lubricate the swivel on the discharge assembly and the swivel on the hose reel.

E. If equipped with the Air Flush Option, refer to the Air Flush System Manual.

WEEKLY OR EVERY 40 HOURS OF OPERATING TIME:

1. Clean the air cleaner following the instructions in the engine operator's manual.
2. Lubricate all the points on the HydroSeeder® as outlined in the daily maintenance section and, in addition, lubricate the four grease fittings on the clutch/pump.
3. Check the level in the hydraulic oil reservoir - maintain level at sight gauge.
4. Check the clutch adjustment to insure that it "snaps" in and out of engagement. Adjust the clutch with the engine off.
5. Check the anti-freeze in the radiator.
6. Inspect the slurry-tank for build up of residue in the suction area and clear if necessary.
7. Check and clean engine radiator. Flush with clear low pressure water and blow dry with compressed air. Do NOT use high pressure water spray.
8. Check pivoting hose reel swivel bolt. Ensure proper torque. Replace bolts if any show signs of wear.

SEASONAL AND WINTER STORAGE MAINTENANCE:

1. Drain the slurry tank of all water prior to storage and leave the drain plug disconnected.
2. If possible cover machine with tarp or park inside of an enclosure.
3. Store the HydroSeeder® with all slurry valve handles in the open position. To prevent damage from freezing, it is advisable to remove all slurry valves and store in a heated area.
4. Pour one quart of mineral oil or environmentally safe lubricant into the pump housing and spin pump by hand to prevent rust in the pump. Remove drain plug.
5. Chip and steel brush any interior rust spots in the slurry-tank and touch up with paint. See #2 and #3 in Maintenance Section of the Safety Summary Section on page 4.
6. Lubricate all fittings.
7. Check anti-freeze in radiator.
8. Lubricate equipment again just prior to starting operation after storage.
10. Change hydraulic oil and filter. (500 hours)
11. Disconnect battery cables. In cold weather, remove battery and store in safe warm place.
12. Add fuel stabilizer to fuel tank.

HYDRAULIC SYSTEM:

The hydraulic system on your Finn HydroSeeder® is designed to give trouble free service, if maintained. The most important areas of maintenance are the hydraulic oil and filtration. The reservoir holds 50 gallons of Mobil DTE-13M or equivalent hydraulic oil. The hydraulic oil should be replaced per the lubrication schedule or if the oil becomes milky or it gives off a burnt odor. The hydraulic oil filter must be replaced on schedule with a 25 micron absolute filter – Finn part #011869. The hydraulic system relief is factory set at 3,200 PSI.

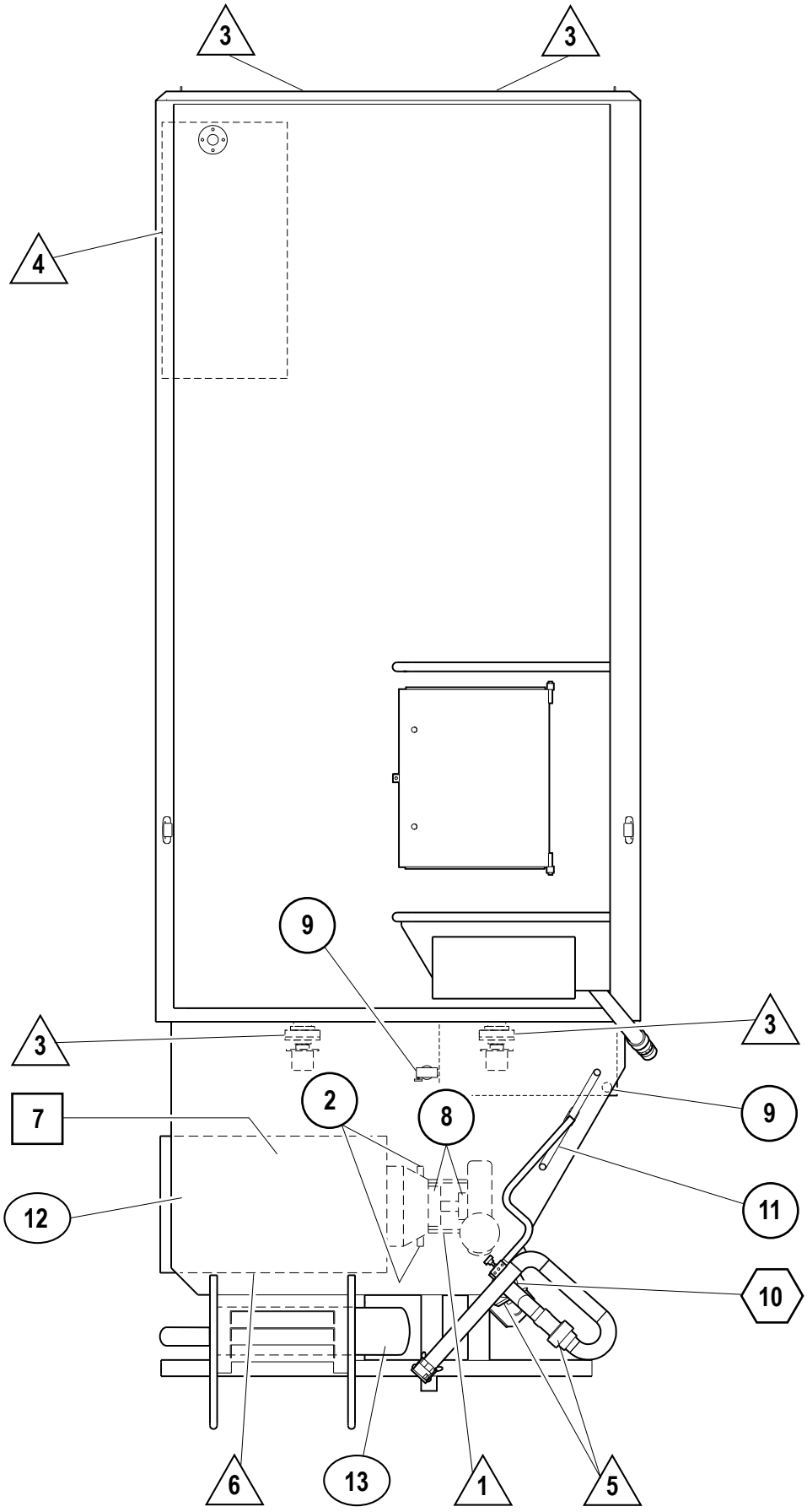
3
3
4
9
3
3
7
2
8
9
12
11
10
6
13
1
5

LUBRICATION CHART

Ref. No.	Location	Lubricant	Frequency	Number
1	Check Grease Level in Pressure Lubricator	BL	Daily	1
2	Check Clutch Lever Bearings	CL	Weekly	2
3	Grease Agitator Shaft Bearings	CL	Daily	4
4	Check Fuel Level	DF	Daily	1
5	Grease Discharge Swivels	CL	Daily	2
6	Check Engine Oil Level	MO	Daily	1
7	Check Engine Oil and Filter	MO	See Engine Manual	1
8	Grease Pump Bearings	BL	Weekly	2
9	Check Hydraulic Fluid Level	HO	Weekly	1
	Change Hydraulic Fluid and Filter	HO	Seasonally or 500 Hours	1
10	Grease Discharge and Recirculation Valves	SL	Each Load	2
11	Grease Valve Arm Lever	CL	Weekly	1
12	Change Engine Coolant	AF	Seasonally	1
13	Remove Muffler Drain Plug	-	Seasonally	1

LUBRICANT OR FLUID USED

BL	Bearing Lube (Soda Based)
CL	Chassis Lubricant
MO	See Engine Manual
HO	Mobil DTE-13M or Equivalent Hydraulic Oil
SL	Special Stick Lubricant
AF	50/50 Anti-Freeze and Water Mixture
DF	Diesel Fuel

TIME KEY

DAILY (8 hours)
WEEKLY (40 hours)
EACH LOAD
SEASONALLY (500 hours)
SEE ENGINE MANUAL

FLUID CAPACITIES

Fuel - 38 Gallons (143.8 L)
Hydraulic Oil - 50 Gallons (189.2 L)
Engine Coolant - 4-1/4 Gallons (16 L) 50/50 Mix Only
Engine Oil - See Engine Manual

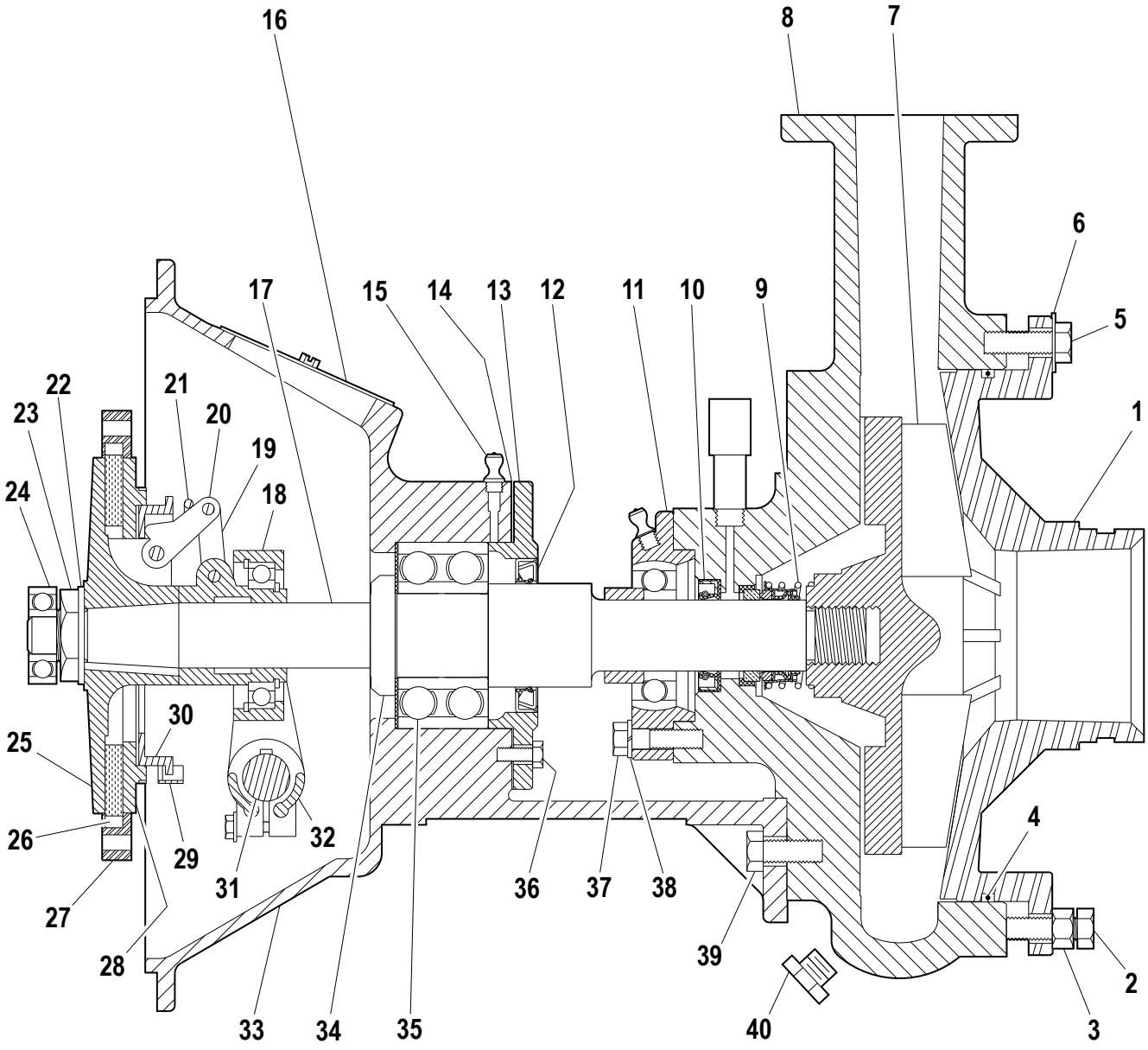

Figure 16 - Clump Parts

CLUMP PARTS

Ref. No.	Part Number	Description	No. Req'd
1	011759	Suction Cover	1
2	X0824SS	Suction Cover Bolt	4
3	0Y08SS	Suction Cover Nut	4
4	011920	O-Ring	1
5	X0824SS	Suction Cover Bolt	8
6	WF08SS	Suction Cover Washer	8
7	011758	Impeller	1
8	012730	Clump Casing	1
9	006443	Mechanical Shaft Seal	1
10	006444	Grease Retainer	1
11	005446	Flange Pilot Bearing	1
12	006444	Grease Retainer	1
13	012734	Bearing Retainer Ring	1
14	005544-02	Sealing Gasket	1
15	007705	Grease Fitting	2
16	100063	Instruction Plate	1
17	012729	Clump Shaft	1
18	100031	Release Bearing	1
19	100019	Connecting Link	6
20	100018	Release Lever	6
21	100026	Lever Spring	1
22	100308	Lock Washer	1
23	100307	Drive Shaft Nut	1
24	022314	Pilot Bearing	1
25	100011	Clutch Body	1
26	100341	Clutch Facing	1
27	100003	Driving Ring	1
28	100028	Pressure Plate	1
29	100013	Adjusting Ring	1
30	100032	Adjusting Ring Plate	1
31	100040	Cross Shaft	1
32	100323	Clutch Yoke	1
33	012695	Clump Housing	1
34	012732	SN-11 Nut	1
35	012731	Bearing	1
36	X0516SS	Thrust Bearing Retainer Bolt	6
37	X0724SS	Flange Bearing Bolt	4
38	WL07SS	Flange Bearing Lock Washer	4
39	X0820SS	Bolt	3
40	160234	Pipe Plug	2

CLUMP MAINTENANCE SECTION:

CAUTION: **Clump maintenance to be done only while engine is not running, and battery cables are disconnected.**

A. FACTORY-TOLERANCES

1. To check clump tolerances loosen the two clamps on the pump suction piping and remove the inlet elbow. Through the pump suction hole, insert a feeler gauge between the impeller (7) and the suction cover (1). This measurement on a new clump is between .040-.045"(1.00-1.15 mm).

B. IMPELLER CLEARANCE

TO BRING THE CLUMP BACK TO PROPER TOLERANCE, PROCEED AS FOLLOWS:

1. Push suction cover (1) into casing (8) until suction cover hits impeller (7). Impeller should be in full contact with suction cover (1).
2. Tighten bolts (5) finger tight. Impeller (7) should rub the suction cover (1) and not turn easily through one revolution.
3. Tighten bolts (2) to 15 lb. ft. (165 kg/m). Impeller (7) should turn freely through one revolution.
4. Back off bolts (5) 3/4 turn.
5. Tighten bolts (2) 3/4 turn and tighten nuts (3) to 15 lb.ft. (165 kg/m).
6. Tighten cap screws (5) to 15 lb. ft. Clearance gap should be about .040" (1.00 mm). Check to see if impeller (7) turns freely through one revolution.

NOTE: Tightening of the bolts (7) should be in a criss-cross pattern. **DO NOT TIGHTEN TO OVER 15 LB. FT. (165 kg/m)**. Doing so can crack the flange of the suction cover (1).

C. CLEANING

1. To clean impeller (7), loosen the two victaulic pipe clamps and remove the suction pipe assembly. The eye of the impeller (7) can then be seen through the suction cover plate (1) and is readily accessible for cleaning.
2. To remove impeller (7), remove the eight bolts (5) holding the cover plate (1) in place. Remove cover plate (1), being careful not to damage the O-Ring (4).
3. Take the impeller wrench, which is stored in the toolbox, and position it so that the hole is aligned with any of the eight tapped holes in the front of the pump casing (8). The 90° leg of the wrench should face in towards the impeller and be positioned between any two of the impeller fins. Bolt the wrench securely in place with one of the suction cover plate bolts (5). Using a pipe wrench on the shaft (17), unscrew the impeller (7) turning the shaft in a clockwise direction. Be careful not to unscrew the impeller too far before removing the puller wrench.

D. INSTALLING NEW SEAL ASSEMBLY

(DO NOT UNWRAP THE NEW SEAL ASSEMBLY UNTIL YOU ARE READY TO INSTALL. ALL PARTS OF THE ASSEMBLY ARE PACKED IN SEQUENCE OF INSTALLATION.)

1. To replace the seal assembly (9), perform the above operations under cleaning and remove pump casing (8) by removing the three bolts (39) holding the clump casing (8) to the clutch body (33).
2. After cleaning all parts including pump shaft, begin the reassembly of the clump. Install seal grease retainer (10) with the cavity portion of the seal facing outward. Rebolt the casing onto the pump frame using the three bolts (39). Using a light oil lubricant (3 in 1), install the ceramic seat with its neoprene holder into the seal recess making sure it is square with the shaft. Lubricate the inside of the bellows assembly with a light oil and check to be sure the steel ring is stuck (glued) to the end of the assembly. Slide the bellows assembly onto the shaft and push till the steel ring is against the ceramic seat.
3. Install the seal spring on the hub of the impeller. After coating the threads on the clump shaft (18) with an anti-seize compound, install the impeller (7) - seating it securely.
4. Utilizing the rubber O-Ring (4) reinstall suction cover (1) using the eight cover bolts (5). At this time, check to see that the clump runs freely. If the impeller (7) rubs the cover plate (1), you do not have the impeller (7) tight on the shaft (17) or the cover plate (1) needs readjustment - see “impeller clearance”. Tighten these bolts (5) uniformly using 15 ft. pounds (165 kg/m) on the torque wrench.
5. After reinstalling the suction pipe assembly, lubricate and tighten the victaulic clamps. Service the automatic lubricator.

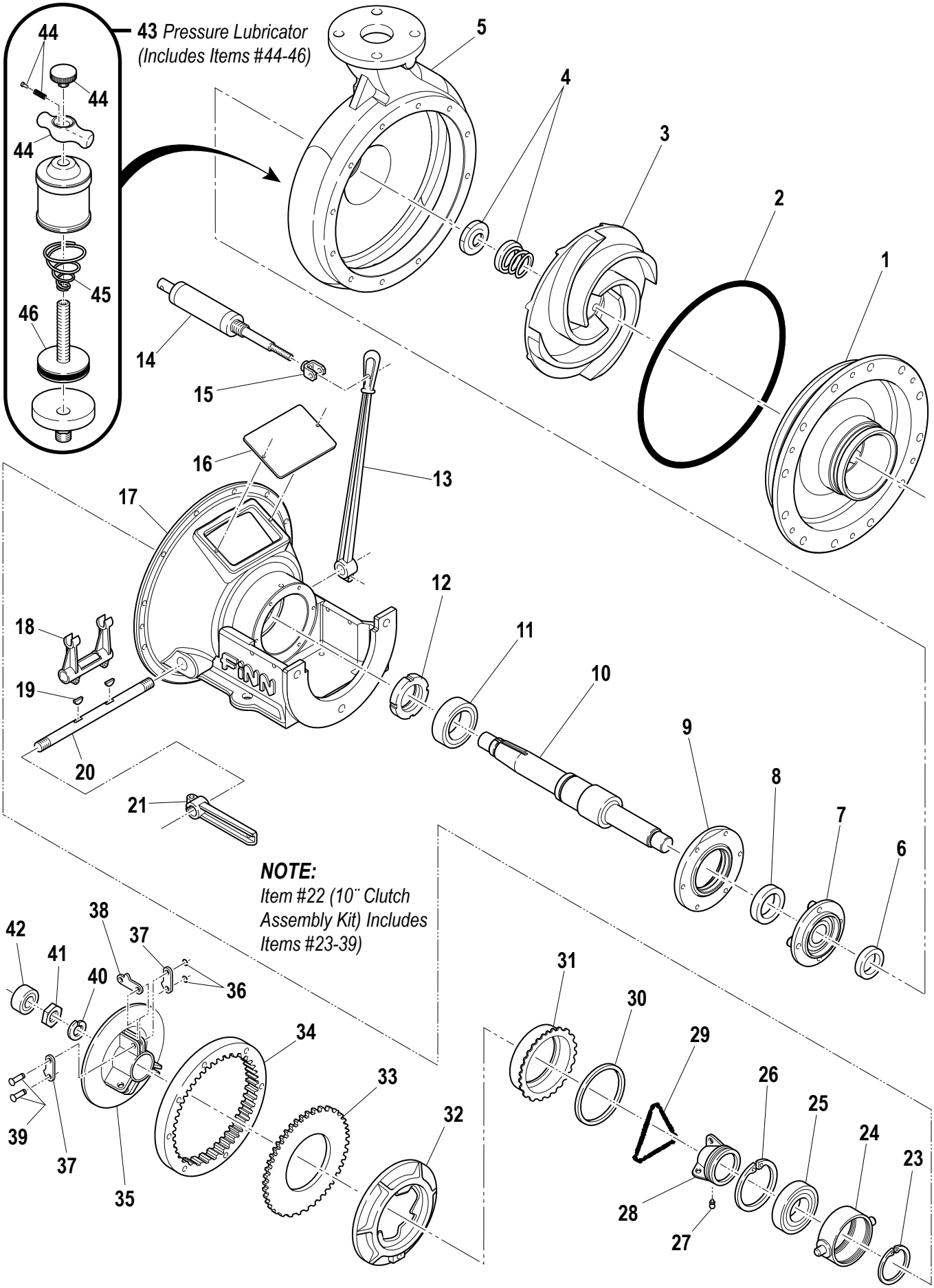

Figure 17 - Clump Assembly

CLUMP ASSEMBLY

Ref. No.	Part Number	Description	No. Req'd
1	011759	Suction Cover	1
2	011920	O-Ring	1
3	011758	Impeller	1
4	006443	Mechanical Shaft Seal	1
5	012730	Clump Casing	1
6	006444	Grease Retainer	1
7	005446	Flange Pilot Bearing	1
8	012733	Seal	1
9	012734	Bearing Retainer Ring	1
10	012729	Clump Shaft	1
11	012731	Bearing	1
12	012732	SN-11 Nut	1
13	012802	Clutch Lever	1
14	012765	1-1/2" Bore x 4" Stroke Cylinder	1
15	F330-0105	Air Clutch Cylinder Clevis	1
16	100063	Instruction Plate	1
17	012695	Clump Housing	1
18	100323	Clutch Yoke	1
19	100042	Woodruff Key	2
20	100040	Yoke Shaft	1
21	005574-02	Modified Clutch Lever	1
22	012783	10" Clutch Assembly Kit	1
23	100321	External Snap Ring	1
24	100030	Bearing Carrier	1
25	100031	Release Bearing	1
26	100332	Internal Snap Ring	1
27	100224	Lube Fitting	1
28	100029	Release	1
29	100026	Lever Spring	1
30	100032	Adjusting Ring Plate	1
31	100013	Adjusting Ring	1
32	100028	Pressure Plate	1
33	100341	10" Clutch Disc	1
34	100003	Driving Ring	1
35	100011	Clutch Body	1
36	100008	Retaining Ring	6
37	100019	Connecting Link	6
38	100018	Release Lever	6
39	100009	Clevis Pin	6
40	100308	Lock Washer	1
41	100307	Drive Shaft Nut	1
42	022314	Pilot Bearing	1
43	002383	Pressure Lubricator	1
44	008190	Screw, Nut, Follower & Spring	1
45	007954	Spring	1
46	008189	Plunger	1

NOTES

NOTES

NOTES

NOTES

NOTES

T280/330
HydroSeeder®
Parts Manual

Model SEA

NOTES

PICTORIAL REFERENCE

STRUCTURE & RAILING
(Pages 44-45)

HATCH ASSEMBLY
(Pages 46-47)

DISCHARGE BOOM ASSY
(Pages 48-49)

CONTROLS
(Pages 62-63)

CONTROL BOX WIRING
(Pages 64-65)

CLUMP, PIPING & DISCHARGE ASSEMBLY
(Pages 58-59)

CLUMP ASSEMBLY
(Pages 60-61)

AGITATOR & SEAL ASSY
(Pages 66-67)

HYDRAULIC SYSTEM
(Pages 68-69)

HYDRAULIC AGITATOR DRIVE
(Page 70)

ENGINE & RADIATOR
(Pages 50-51)

ENGINE SHEET METAL
(Pages 52-53)

AIR INTAKE & EXHAUST SYSTEM
(Pages 54-55)

ENGINE WIRING DIAGRAM
(Pages 56-57)

GROUND LEVEL CONTROLS
(Page 71)

HOSE REEL ASSEMBLY
(Pages 72-73)

DECALS ..... *Pages 74-75*
DISCHARGE HOSE EXTENSIONS ..... *Page 76*
RECOMMENDED SPARE PARTS AND REPAIR KITS ..... *Page 77*
TOOL KIT ..... *Page 78*

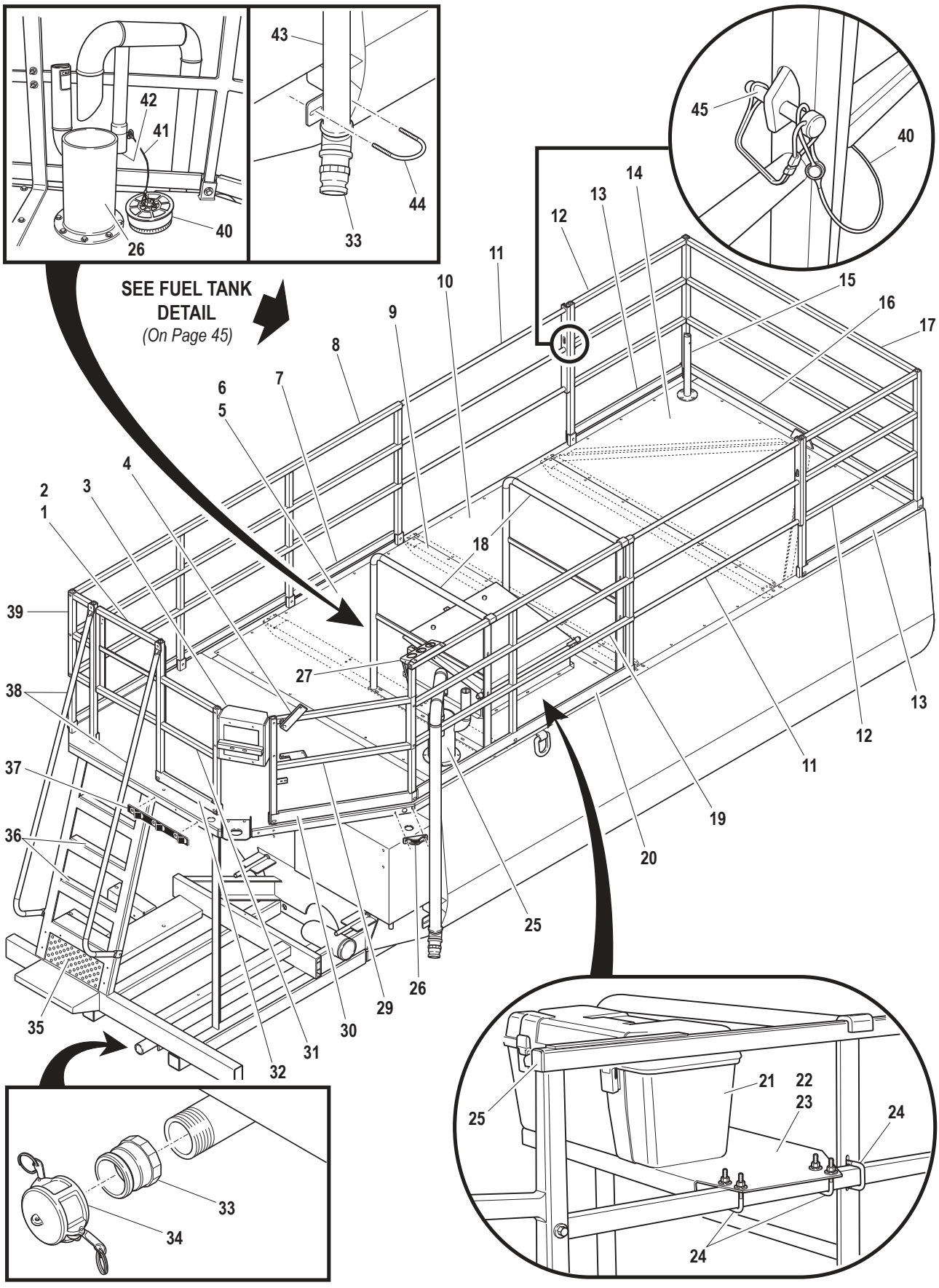

WHEN ORDERING PARTS, BE SURE TO STATE SERIAL NUMBER OF MACHINE

FUEL TANK DETAIL

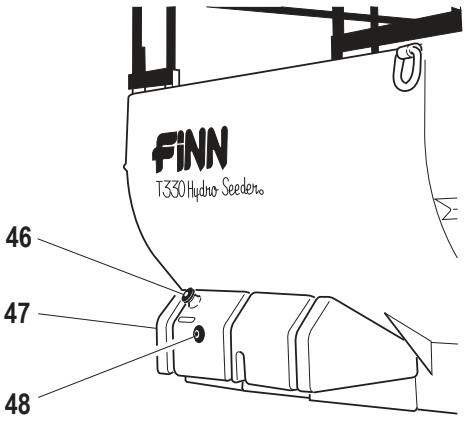

STRUCTURE & RAILING

Ref. No.	Part Number	Description	No. Req'd
1	012700	Swing Gate	1
2	012755	Spring Hinge	1
3	F330-0074	Control Box Mount	1
4	F330-0081	Boom Holddown	1
5	F330-0108	Main Tank Top	1
6	190047	Foam Gasket	36'/41'
7	F330-0085	Left Rear Toe Rail	1
8	012706	Left Rear Guard Rail	1
9	F170-0038	Tank Top Support	3
10	F330-0109	Small Tank Top	1
11	012703	Slide Gate	2
12	012704	T330 Front Side Guard Rail	2
	012737	T280 Front Side Guard Rail	2
13	F330-0083	T330 Front Side Toe Rail	2
	T280-0005	T280 Front Side Toe Rail	2
14	F330-0109-02	Front Tank Top	1
15	005714-01	Tank Vent Port	1
16	F330-0082	Front Toe Rail	1
17	012705	Front Guard Rail	1
18	012708	Hatch Safety Guard Rail	2
19	012702	Right Rear Guard Rail	1
20	F330-0086	Right Rear Toe Rail	1
21	012669	Toolbox	1
22	F330-0078	Tool Box Mount	1
23	005619	U-Bolt For 1-1/4" Round Pipe	2
24	012514	Square U-Bolt For 1-1/2" Square Pipe	6
25	005613	Square Tubing Plug	10
26	012750	Fill Stack Extension	1
27	F330-0075	Nozzle Holder	1
28	002290	Rear Marker Light - Red	2
29	012736	Rear Corner Guard Rail	1
30	F330-0084	Rear Corner Toe Rail	1
31	012701	Long Rear Guard Rail	1
32	F330-0089	Long Rear Toe Rail	1
33	002191	2-1/2" Male Brass Adapter	2
34	002190	Dust Cap w/Gasket - Main Tank Drain	1
35	F330-0099	Muffler Shield	1
36	190018	2" Wide Conformable Safety Walk	A/R (Ft.)
37	060316	3-Marker Light	1
38	012771	Ladder Hand Rail	2
39	012707	Short Rear Guard Rail	1
40	008470	Fill Port Plug	1
41	005700	Nylon Lanyard	3
42	012515	1-1/4" Pipe Plug	1
43	012829	2-1/2" Fill Port	1
44	085148	U-Bolt	1
45	FW71225	Slide Gate Snapper Pin	2
46	012693C	Fuel Tank Cap	1
47	012693	Poly Fuel Tank	1
48	012694	Fuel Gauge	1

WHEN ORDERING PARTS, BE SURE TO STATE SERIAL NUMBER OF MACHINE

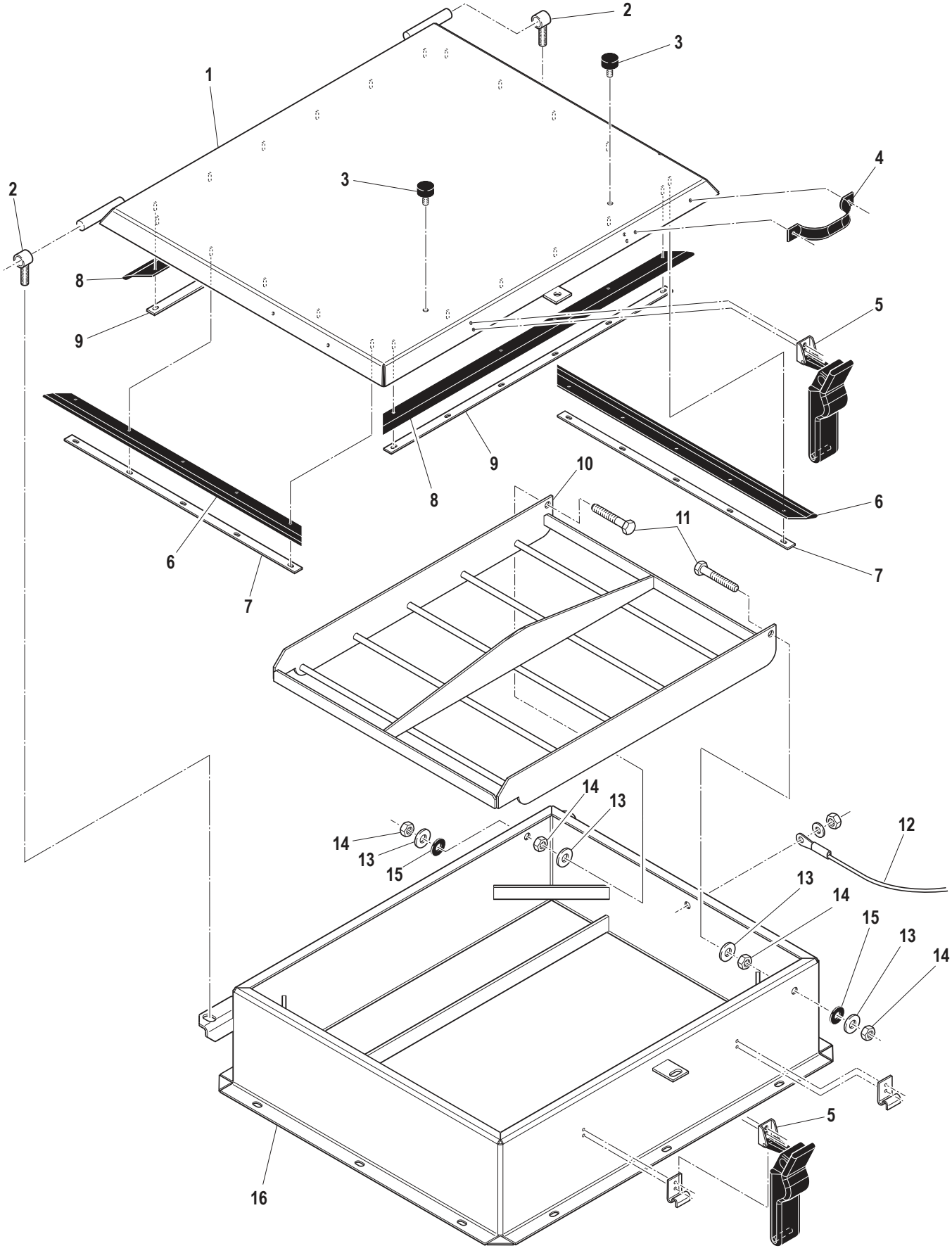

WHEN ORDERING PARTS, BE SURE TO STATE SERIAL NUMBER OF MACHINE

HATCH ASSEMBLY

Ref. No.	Part Number	Description	No. Req'd
1	012711	Hatch Lid	1
2	070627	Hatch Lid Hinge	2
3	085152	Rubber Stud Mount	2
4	002909	Hatch Handle	1
5	005433	Soft Latch	2
6	005487-04	Side Hatch Lid Gasket	2
7	005487-03	Side Gasket Strip Retainer Strap	2
8	012714-04	Front/Back Hatch Lid Gasket	2
9	012714-03	Front/Back Gasket Retainer Strap	2
10	012751	Bag Cutter	1
11	X0848SS	1/2-13 UNC x 3" Lg. Hex Head Cap Screw - SS	2
12	005565	3/32" Stainless Steel Lanyard	1
13	W08FSS	1/2" Flat Washer - SS	4
14	Y08LSS	1/2-13 UNC Lock Nut - SS	4
15	012605	1/2" SS Sealing Washer	2
16	012709	Hatch Liner	1

WHEN ORDERING PARTS, BE SURE TO STATE SERIAL NUMBER OF MACHINE

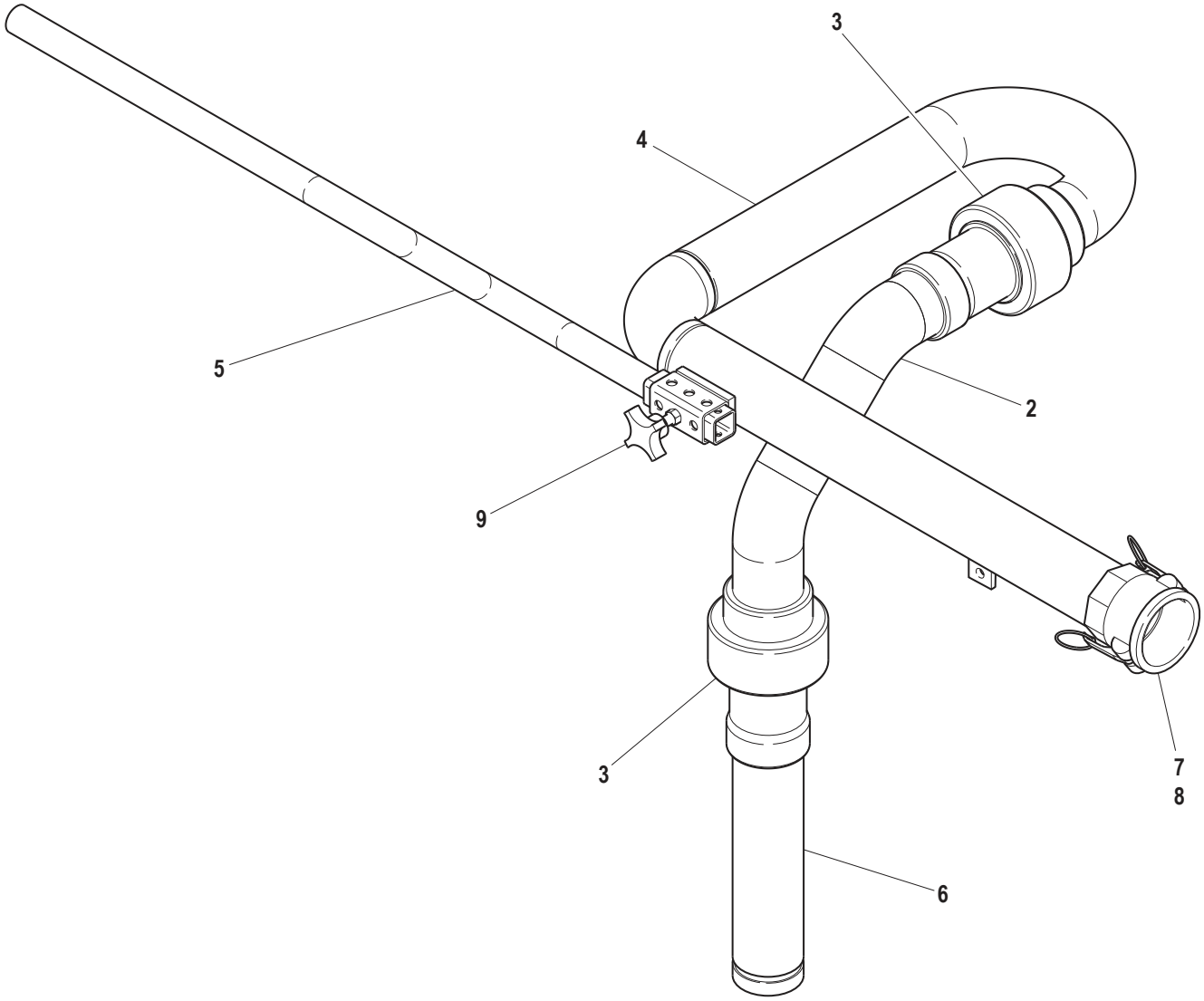

NOTE:
ITEM #1 (DISCHARGE BOOM ASSEMBLY)
INCLUDES ITEMS #2 - #7.

WHEN ORDERING PARTS, BE SURE TO STATE SERIAL NUMBER OF MACHINE

DISCHARGE BOOM ASSEMBLY

Ref. No.	Part Number	Description	No. Req'd
1	012764	Discharge Boom Assembly	1
2	012763	Lower Boom Discharge Weldment	1
3	012283	2-1/2" Straight Swivel	2
4	012762	Upper Boom Discharge Weldment	1
5	012756	Boom Discharge Handle	1
6	012726-01	Boom Stand Pipe	1
7	010544	2-1/2" Female Coupler	1
8	006513	2-1/2" Coupler Gasket	1
9	011914	Black Hand Knob	1
		NOT ILLUSTRATED	
	012397	Swivel Repair Kit	2

WHEN ORDERING PARTS, BE SURE TO STATE SERIAL NUMBER OF MACHINE

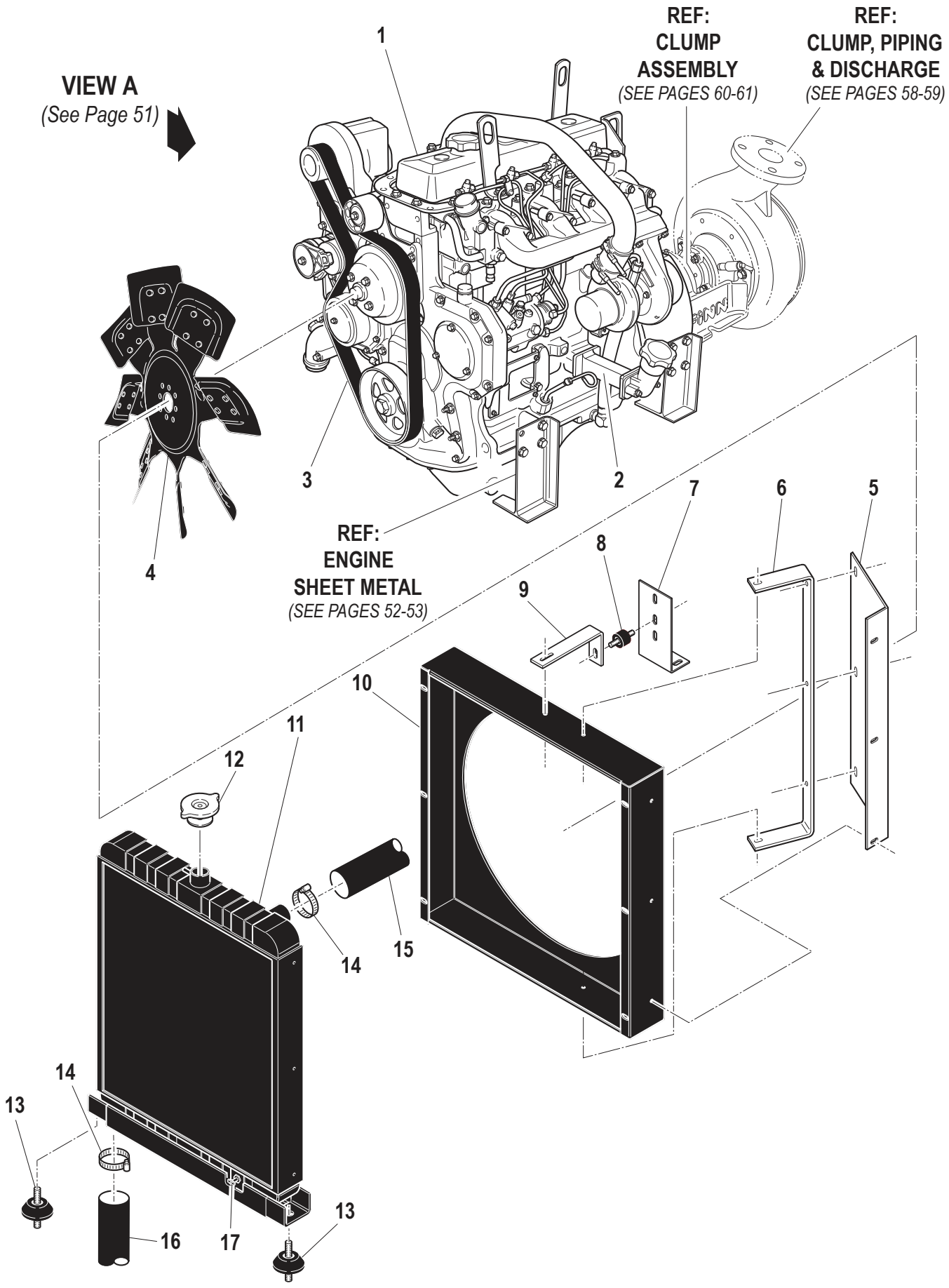

WHEN ORDERING PARTS, BE SURE TO STATE SERIAL NUMBER OF MACHINE

VIEW A

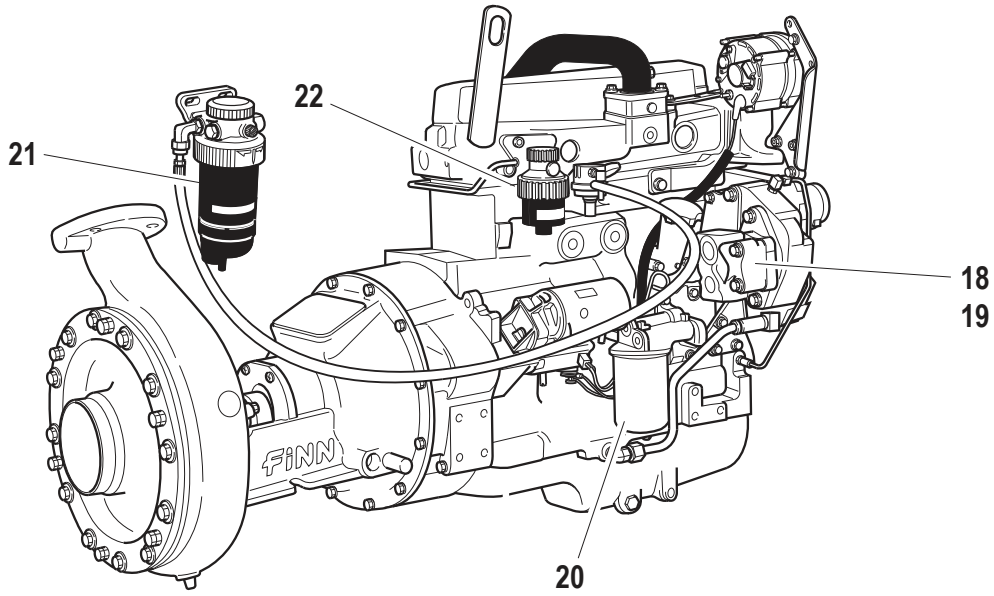

ENGINE & RADIATOR

Ref. No.	Part Number	Description	No. Req'd
1	023864	4045T Tier 2 Engine Assembly	1
2	012611	Oil Fill Extension	1
3	JDR123442	Fan Belt	1
4	011747	Pusher Fan	1
5	F816-0008-01	Fan Guard	1
6	F816-0008-02	Fan Guard Mounting Strap	1
7	023812-02	Radiator Arm Support Bracket	1
8	023438	Rubber Mount	1
9	075562	Radiator Bracket	1
10	F330-0093	Fan Shroud	1
11	012620	Radiator	1
12	023807	Radiator Cap	1
13	008641	Isolator Mount	2
14	022450	2-1/2" Hose Clamp	4
15	JDR128455	Upper Radiator Hose	1
16	023845	Lower Radiator Hose	1
17	022452	Drain Cock	1
18	011922	Hydraulic Pump	1
19	JDR96934	Pump Gasket	1
20	JDRE504836	Oil Filter	1
21	JDRE517181	Secondary Fuel Filter	1
22	JDRE509031	Primary Fuel Filter	1

WHEN ORDERING PARTS, BE SURE TO STATE SERIAL NUMBER OF MACHINE

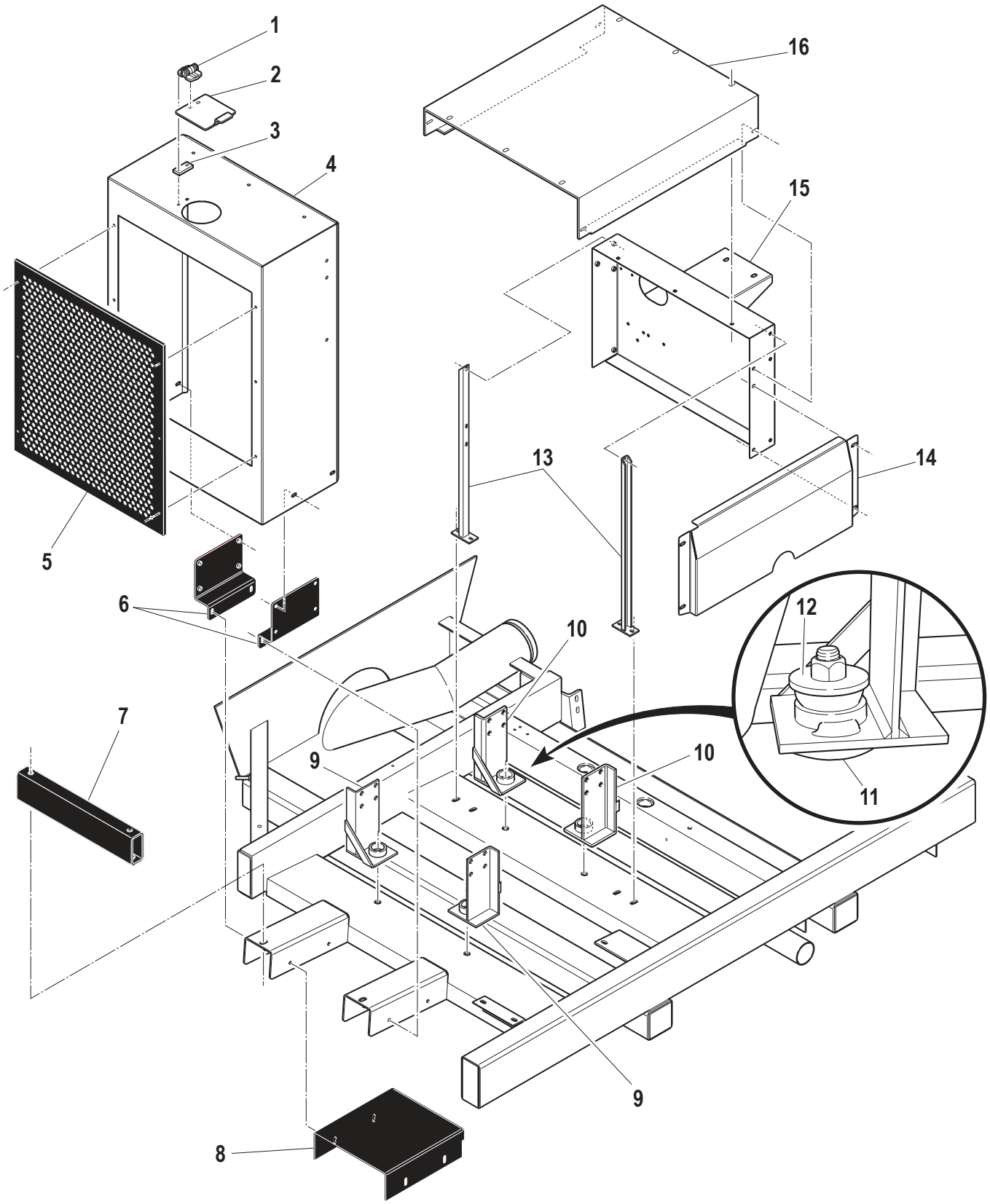

WHEN ORDERING PARTS, BE SURE TO STATE SERIAL NUMBER OF MACHINE

ENGINE SHEET METAL

Ref. No.	Part Number	Description	No. Req'd
1	055669	Lock Positioning Hinge	1
2	F260-0006-02	Radiator Cap Cover	1
3	F260-0006-03	Hinge Spacer	1
4	F170-0023	Radiator Shroud	1
5	075562-01	Radiator Screen	1
6	F170-0026	Front Sheet Metal Mount	2
7	012835	Radiator Spacer	1
8	F170-0020	Radiator Pan	1
9	012753	Front Engine Foot	2
10	052397	Rear Engine Foot	2
11	007433	Rubber Shock Mount	6
12	007887	Snubbing Washer	6
13	008664	Rear Panel Mount	2
14	F170-035	Engine Side Panel	1
15	008663	Rear Engine Panel	1
16	F916-0033	Engine Top Cover	1

WHEN ORDERING PARTS, BE SURE TO STATE SERIAL NUMBER OF MACHINE

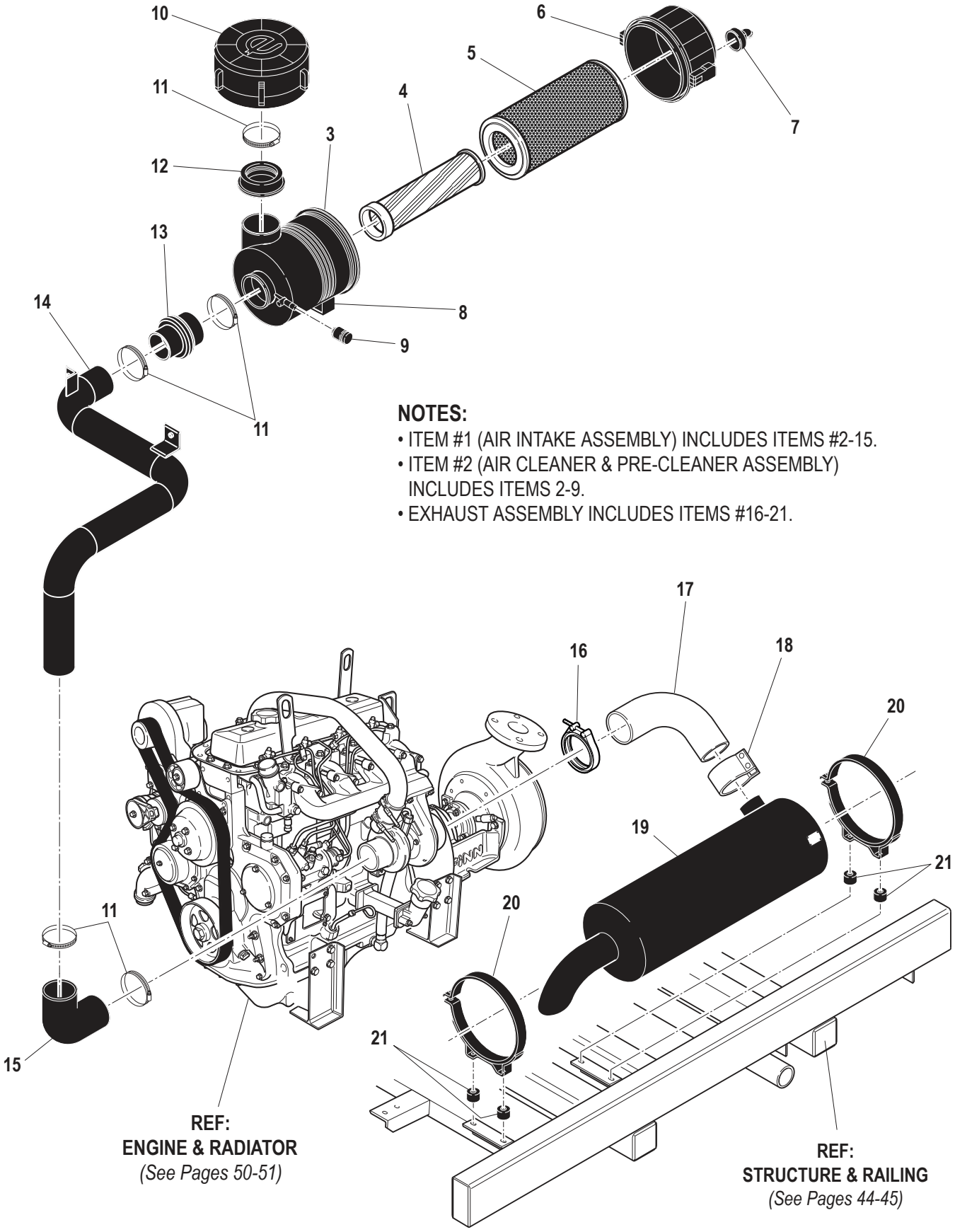

NOTES:

- ITEM #1 (AIR INTAKE ASSEMBLY) INCLUDES ITEMS #2-15.
- ITEM #2 (AIR CLEANER & PRE-CLEANER ASSEMBLY) INCLUDES ITEMS 2-9.
- EXHAUST ASSEMBLY INCLUDES ITEMS #16-21.

WHEN ORDERING PARTS, BE SURE TO STATE SERIAL NUMBER OF MACHINE

AIR INTAKE & EXHAUST SYSTEM

Ref. No.	Part Number	Description	No. Req'd
1	012626	Air Intake Assembly *(Includes Items #2-16)*	1
2	012646	Air Cleaner & Pre-Cleaner Assembly *(Includes Items #2-12)*	1
3	012621	Air Cleaner	1
4	012623	Safety Filter Element (3.75-E2)	1 per
5	012622	Main Filter Element (3.75-E1)	1 per
6	012621D	Filter Cap	1 per
7	012621A	Flapper Valve	1 per
8	012621C	Mounting Bracket	1 per
9	012621B	Dust Load Indicator Gauge	1 per
10	012608	Pre-Cleaner	1
11	022657	4" Clamp	11
12	012609	Pre-Cleaner Adapter	1
13	008618	Hump Adapter	1
14	012840	Turbo Inlet Tube Weldment	1
15	011852	Rubber Elbow	1

EXHAUST ASSEMBLY

16	023800	V-Band Clamp	1
17	012790-01	Exhaust Elbow	1
18	340010	Butt Joint Clamp	1
19	012744	Exhaust Silencer	1
20	012745	Silencer Mounting Band	2
21	023438	Rubber Shock Mount	4

WHEN ORDERING PARTS, BE SURE TO STATE SERIAL NUMBER OF MACHINE

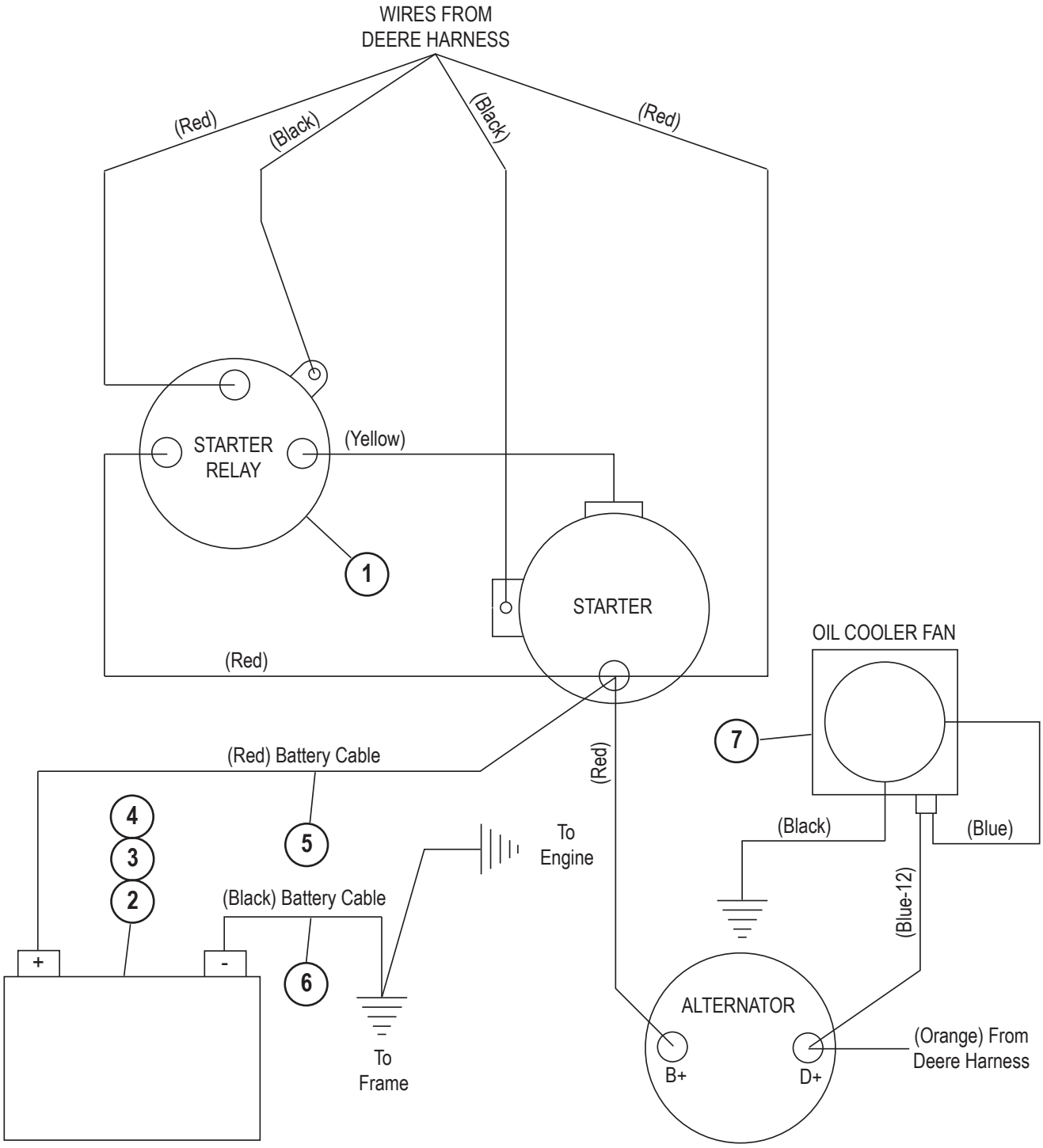

WHEN ORDERING PARTS, BE SURE TO STATE SERIAL NUMBER OF MACHINE

ENGINE WIRING DIAGRAM

Ref. No.	Part Number	Description	No. Req'd
1	022891	Starter Relay	1
2	011851	Battery (12 Volt)	1
3	011770	Battery Box	1
4	007091	Ground Strap	1
5	008171	Battery Cable - Red	1
6	031350	Battery Cable - Black	1
7	075523	Oil Cooler	1
8	075494-TS	Temp Switch for Oil Cooler	1

WHEN ORDERING PARTS, BE SURE TO STATE SERIAL NUMBER OF MACHINE

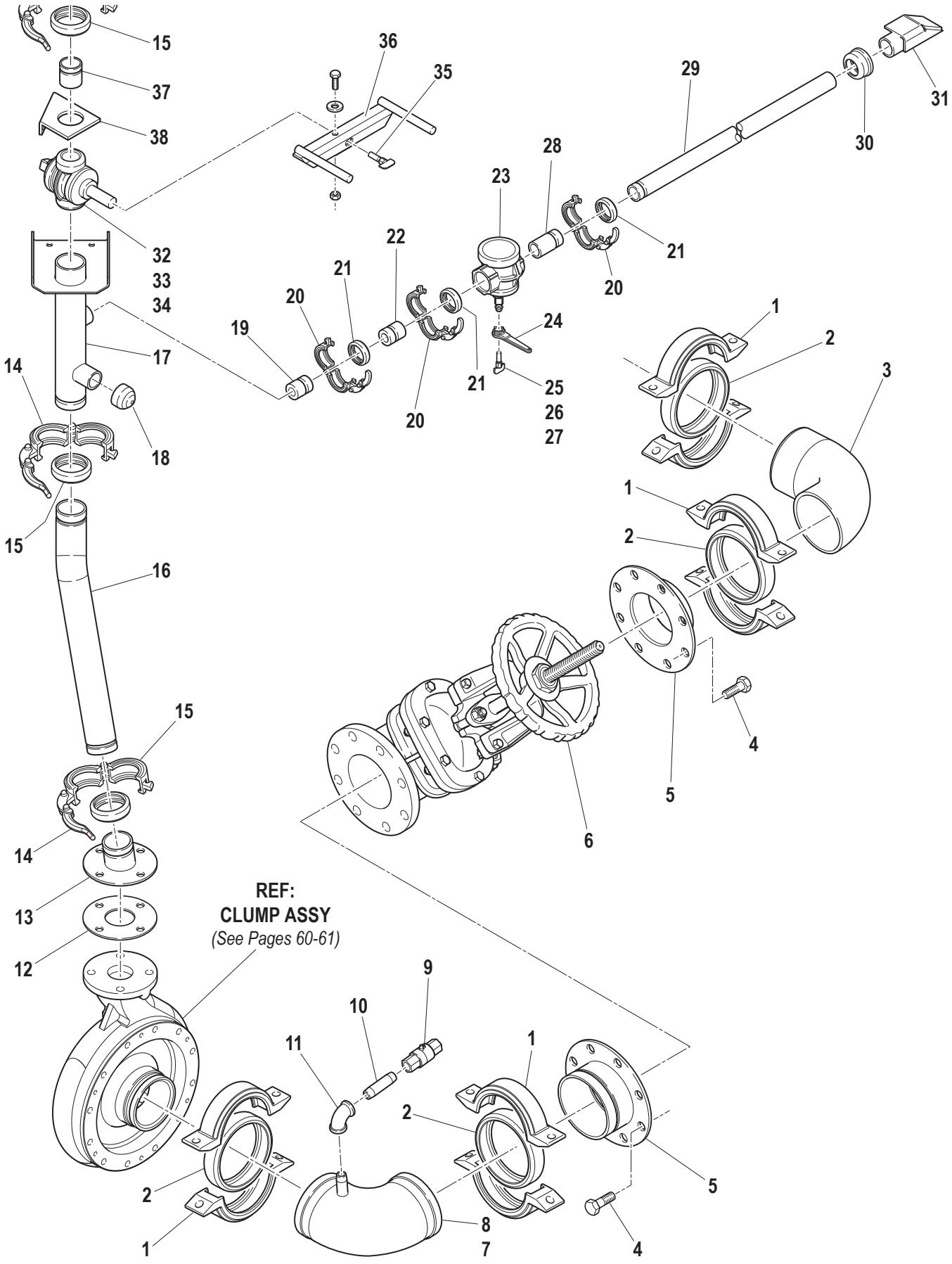

WHEN ORDERING PARTS, BE SURE TO STATE SERIAL NUMBER OF MACHINE

CLUMP, PIPING & DISCHARGE ASSEMBLY

Ref. No.	Part Number	Description	No. Req'd
1	011736	5" Vitaulic Pipe Clamp	4
2	011919	Seal For 5" Vitaulic Pipe Clamp	1 Per
3	008259	5" Dia x 90º Pipe Elbow	1
4	0X1232	3/4-10 Hex Bolt	16
5	012722	Suction Valve Flange Weldment	2
6	012058	5" Flanged Suction Gate Valve	1
7	012491	Suction Valve Bleeder Valve Assembly	1
8	012491-02	Suction Elbow Weldment	1 Per
9	012457	1/2" Dia. Stainless Steel Ball Valve	1 Per
10	160428	1/2" Dia. x 4" Lg. SCH 40 Nipple	1 Per
11	160006	1/2" Dia. x 90º Elbow	1 Per
12	011787	Pump Discharge Gasket	1
13	012761	Pump Flange Weldment	1
14	002771	2-1/2" Vitaulic Pipe Clamp	3
15	002820	Seal For 2-1/2" Vitaulic Pipe Clamp	1 Per
16	012725	Lower Discharge Pipe	1
17	012724	Discharge Valve Stand Pipe	1
18	160263	1-1/2" Dia. Pipe Cap	1
19	011727-09	Recirculation Nozzle	1
20	006721	1-1/4" Vitaulic Pipe Clamp	3
21	006722	Seal For 1-1/4" Vitaulic Pipe Clamp	1 Per
22	011727-10	Recirculation Nozzle	1
23	011776	1-1/4" Round Port 2-Way Valve	1
24	012786	Recirculation Lever	1 Per
25	004962	Lube Screw	1 Per
26	011950	Gasket For 1-1/4" Valve	1 Per
27	011951	Spring For 1-1/4" Valve	1 Per
28	011727-11	Recirculation Nozzle	1
29	012726-03	Recirculation Pipe	1
30	012462-05	Recirculation Pipe Seal/Coupling	1
31	005703-02	1-1/4" Coupling Deflector	1
32	011777	2-1/2" Round Port 2-Way Valve	1
33	011953	Spring	1
34	011952	Gasket	1
35	004962	Lube Screw	1
36	012758	Valve Foot Pedal	1
37	Z0612SCP	Set Screw	1
38	011882	2-1/2" SCH 40 x 3" Toe-Goe Pipe	1

WHEN ORDERING PARTS, BE SURE TO STATE SERIAL NUMBER OF MACHINE

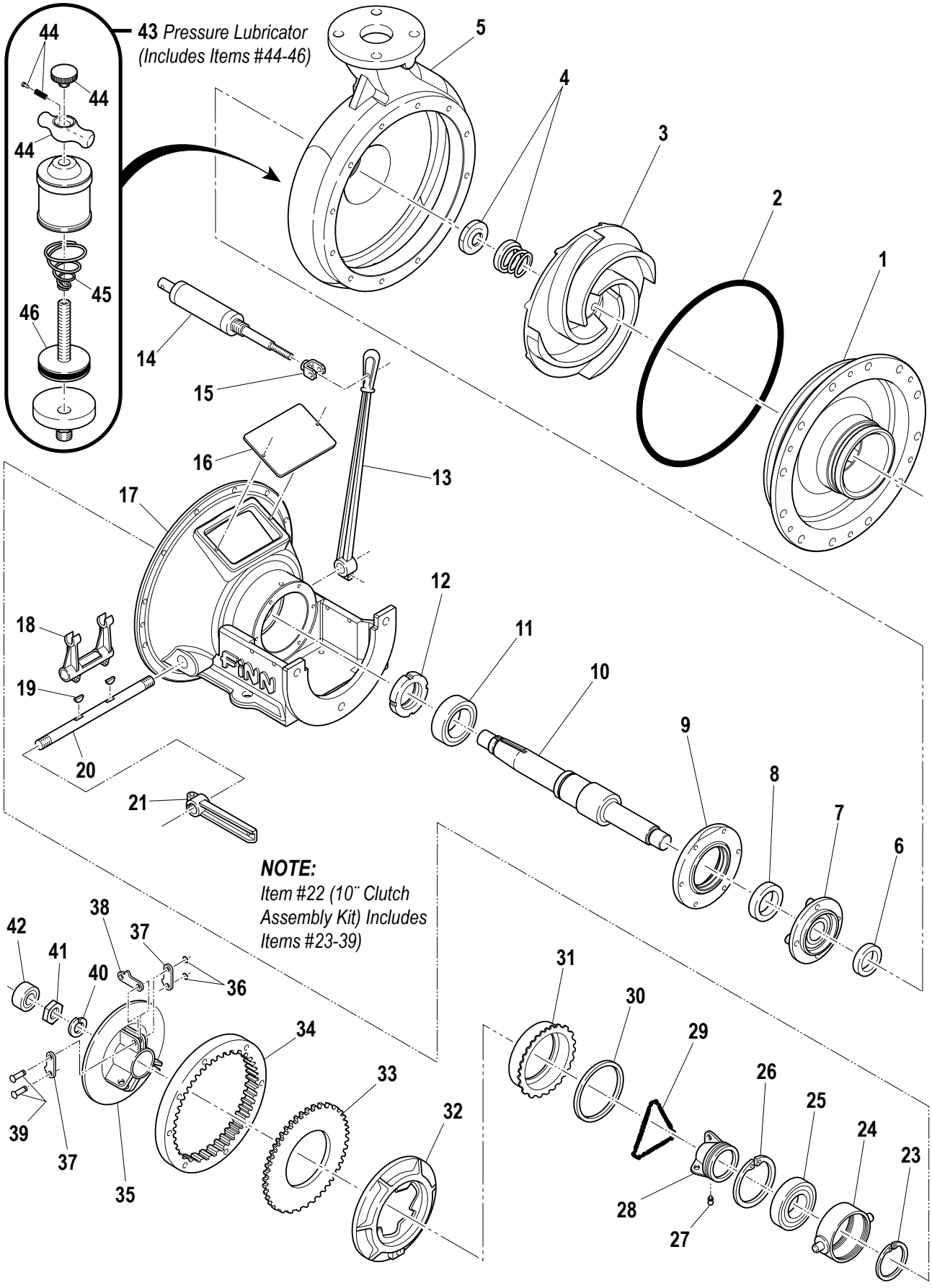

WHEN ORDERING PARTS, BE SURE TO STATE SERIAL NUMBER OF MACHINE

CLUMP ASSEMBLY

Ref. No.	Part Number	Description	No. Req'd
1	011759	Suction Cover	1
2	011920	O-Ring	1
3	011758	Impeller	1
4	006443	Mechanical Shaft Seal	1
5	012730	Clump Casing	1
6	006444	Grease Retainer	1
7	005446	Flange Pilot Bearing	1
8	012733	Seal	1
9	012734	Bearing Retainer Ring	1
10	012729	Clump Shaft	1
11	012731	Bearing	1
12	012732	SN-11 Nut	1
13	012802	Clutch Lever	1
14	012765	1-1/2" Bore x 4" Stroke Cylinder	1
15	F330-0105	Air Clutch Cylinder Clevis	1
16	100063	Instruction Plate	1
17	012695	Clump Housing	1
18	100323	Clutch Yoke	1
19	100042	Woodruff Key	2
20	100040	Yoke Shaft	1
21	005574-02	Modified Clutch Lever	1
22	012783	10" Clutch Assembly Kit	1
23	100321	External Snap Ring	1
24	100030	Bearing Carrier	1
25	100031	Release Bearing	1
26	100332	Internal Snap Ring	1
27	100224	Lube Fitting	1
28	100029	Release	1
29	100026	Lever Spring	1
30	100032	Adjusting Ring Plate	1
31	100013	Adjusting Ring	1
32	100028	Pressure Plate	1
33	100341	10" Clutch Disc	1
34	100003	Driving Ring	1
35	100011	Clutch Body	1
36	100008	Retaining Ring	6
37	100019	Connecting Link	6
38	100018	Release Lever	6
39	100009	Clevis Pin	6
40	100308	Lock Washer	1
41	100307	Drive Shaft Nut	1
42	022314	Pilot Bearing	1
43	002383	Pressure Lubricator	1
44	008190	Screw, Nut, Follower & Spring	1
45	007954	Spring	1
46	008189	Plunger	1

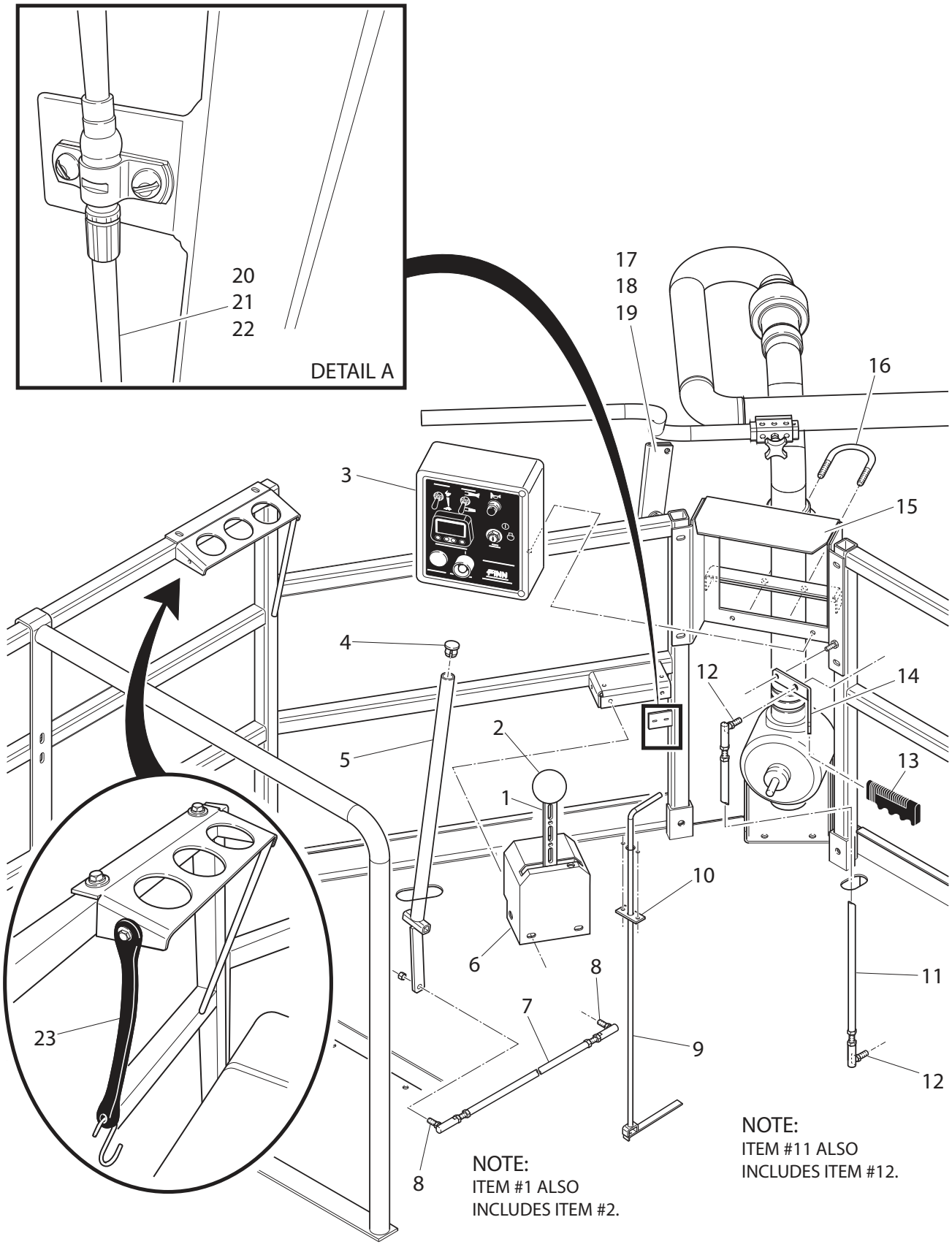

WHEN ORDERING PARTS, BE SURE TO STATE

CONTROLS

Ref. No.	Part Number	Description	No. Req'd
1	011785	Agitator Control Assembly	1
2	011954	Black Knob - 1-3/16" Dia.	1 Per
3	012772	T330 Tier II Control Box Assembly	1
4	004996	1" Pipe Plug	1
5	012777	Recirculation Handle	1
6	F330-0102	Agitator Control Box	1
7	012780-04	Recirculation Valve Rod Assembly	1
8	006737	Ball Joint	2 Per
9	012493-01	Bleeder Valve Handle	1
10	012493-09	Handle Bearing Pad	1
11	012780-01	Clutch Rod Assembly	1
12	006737	Ball Joint	2 Per
13	000427	Black Handle Grip	1
14	012760	Clutch Handle	1
15	F330-0074	Control Box Mount	1
16	085148	U-Bolt	1
17	031245	Snapper Pin	1
18	005700	Lanyard	1
19	F330-0081	Boom Holddown	1
20	006596	Agitator Control Cable	1
21	007675	Ball Joint	2
22	004983	Clamp and Shim	1
23	007913	Rubber Strap w S-Hooks	1

WHEN ORDERING PARTS, BE SURE TO STATE

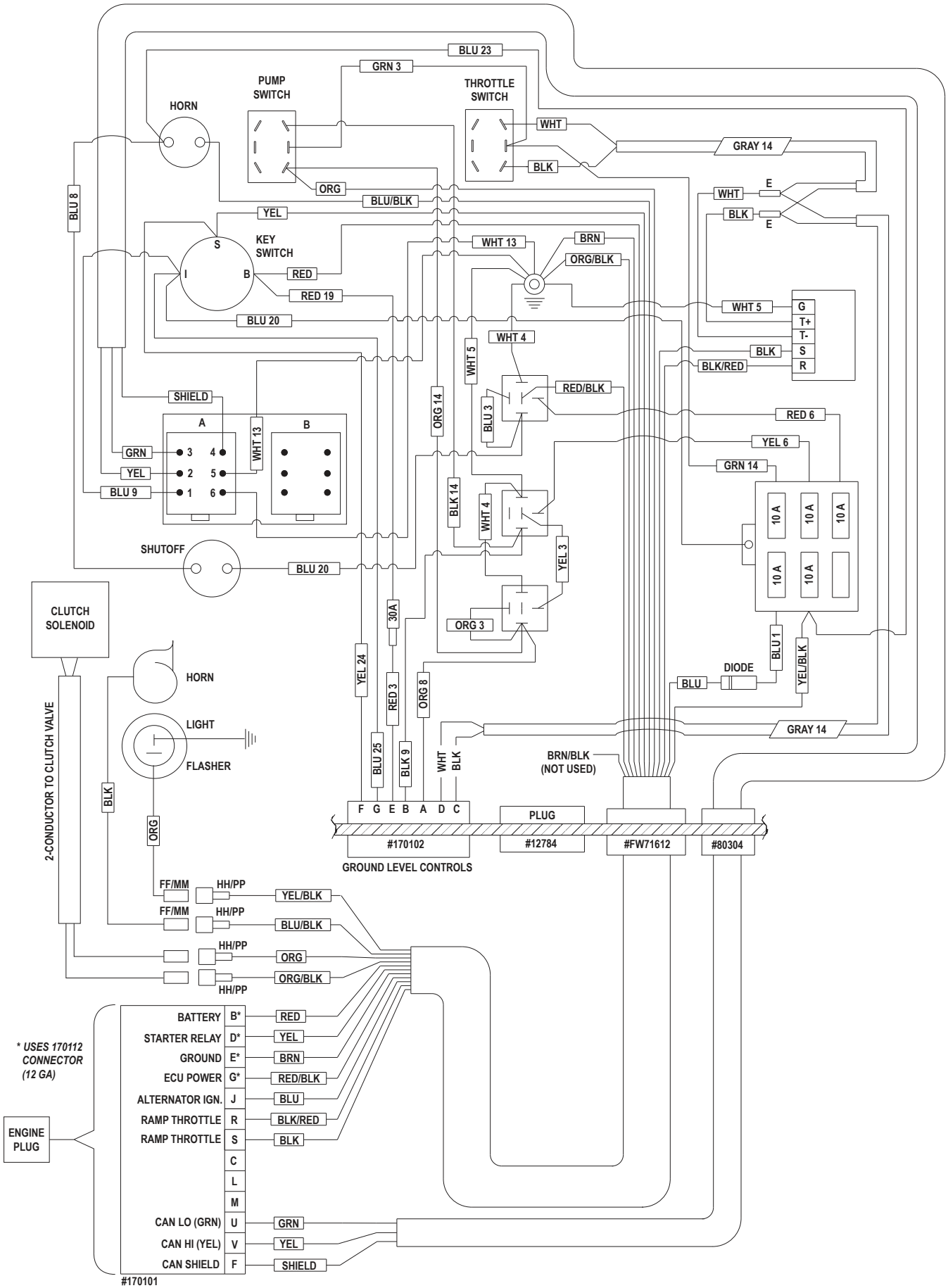

WHEN ORDERING PARTS, BE SURE TO STATE SERIAL NUMBER OF MACHINE

CONTROL BOX WIRING

Part Number	Description	No. Req'd
012743	Modified Control Box	1
012742	Modified Subpanel	1
012739	PowerView	1
052118	6 Circuit Fuse Panel	1
012727	Throttle Control Card	1
012784	1-1/2" Hole Plug	1
080526	Switch Boot	2
022425	Diode	1
020886	Horn Button	1
052076	Key Switch	1
023076	Key for Ignition Switch	1
055449	10 Amp Fuse	5
FW71555	Toggle Switch	2
FW71749-02	30 Amp Relay	3
JDRE503681	Throttle Emulator	1
045297	1/2" Conduit Hole Plug - Gray w/Seal	1
080304	Watertight Fitting	1
FW71612	Cord Connector w/Locknut	1
170028	30 Amp In-Line Fuse and Holder	1

WHEN ORDERING PARTS, BE SURE TO STATE SERIAL NUMBER OF MACHINE

BEARING & SEAL ASSEMBLY

NOTE:
ITEM #1 (BEARING & SEAL ASSY)
INLUDES ITEMS #2 - 9.

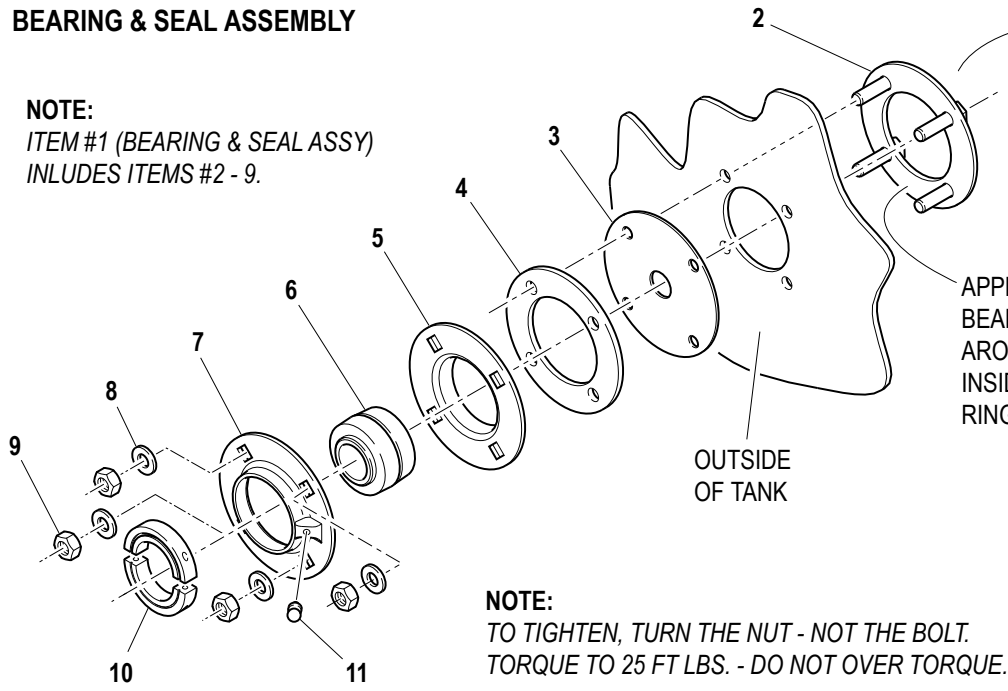

NOTE:
TO TIGHTEN, TURN THE NUT - NOT THE BOLT.
TORQUE TO 25 FT LBS. - DO NOT OVER TORQUE.

AGITATOR ASSEMBLY

NOTE:
ITEM #12 (LEFT HAND
AGITATOR ASSEMBLY)
INLUDES ITEMS #13 - 17.

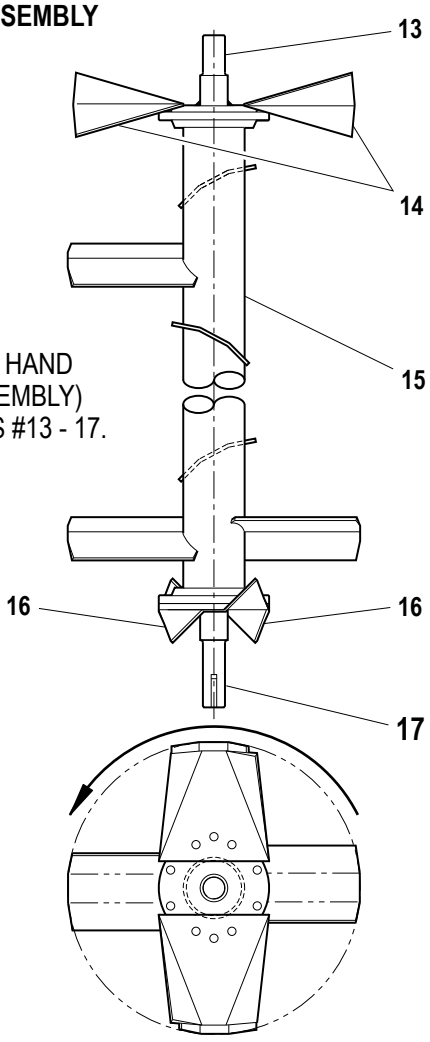

LEFT-HAND AGITATOR

NOTE:
ITEM #18 (RIGHT HAND
AGITATOR ASSEMBLY)
INLUDES ITEMS #19 - 23.

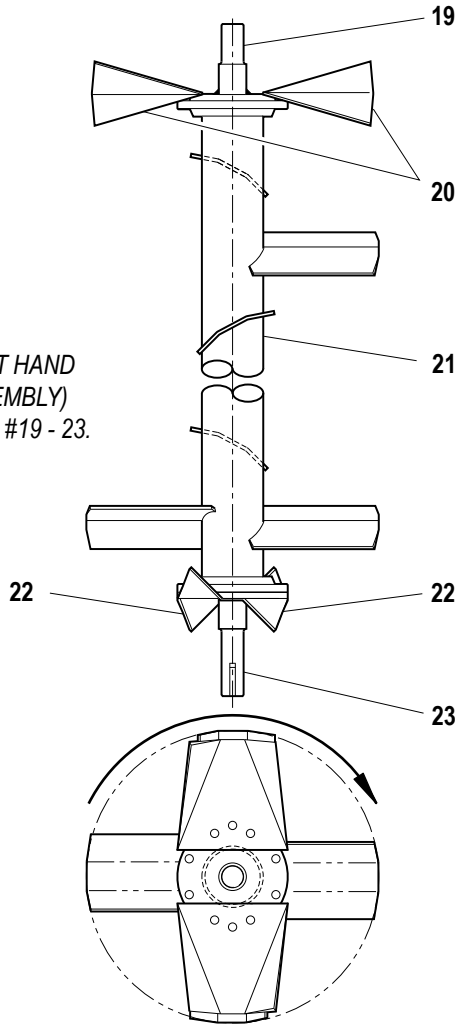

RIGHT-HAND AGITATOR

DRIVE END

WHEN ORDERING PARTS, BE SURE TO STATE SERIAL NUMBER OF MACHINE

AGITATOR & SEAL ASSEMBLY

Ref. No.	Part Number	Description	No. Req'd
1	012529	Bearing and Seal Assembly	4
2	012527	Inner Clamping Ring w/Studs	1 per
3	012528	Agitator Shaft Seal	1 per
4	012525	Outer Clamping Ring	1 per
5	012451	Flangette	1 per
6	012450	2" Dia. Ball Bearing	1 per
7	012452	Flangette w/Lube Coupling	1 per
	008154	Lube Coupling Adapter	1 per
8	012605	Agitator Seal Washer	4 per
9	000Y08	Agitator Hex Nut	4 per
10	012625	2" Split Lock Collar	2
11	007705	Grease Fitting	2
	022407	Grease Line Elbow	2
	012520	Bulk Head Fitting	2
	012521	Grease Line Hose	2
12	012504-02	Left-Hand Agitator Assembly (T280)	1
	012503-02	Left-Hand Agitator Assembly (T330)	1
13	012496-01	Idle Stub Shaft	1 per
14	F330-0010-01	Bolt-On Paddle	2 per
15	012501-02	Left-Hand Agitator Section (T280)	1 per
	012500-02	Left-Hand Agitator Section (T330)	1 per
16	F330-0010-01	Bolt-On Paddle	2 per
17	012495-01	Drive Stub Shaft	1 per
18	012504-01	Right-Hand Agitator Assembly (T280)	1 per
	012503-01	Right-Hand Agitator Assembly (T330)	1 per
19	012496-01	Idle Stub Shaft	1 per
20	F330-0010-01	Bolt-On Paddle	2 per
21	012501-01	Right-Hand Agitator Section (T280)	1 per
	012500-01	Right-Hand Agitator Section (T330)	1 per
22	F330-0010-02	Bolt-On Paddle w/Identification Hole	2 per
23	012495-01	Drive Stub Shaft	1 per

WHEN ORDERING PARTS, BE SURE TO STATE SERIAL NUMBER OF MACHINE

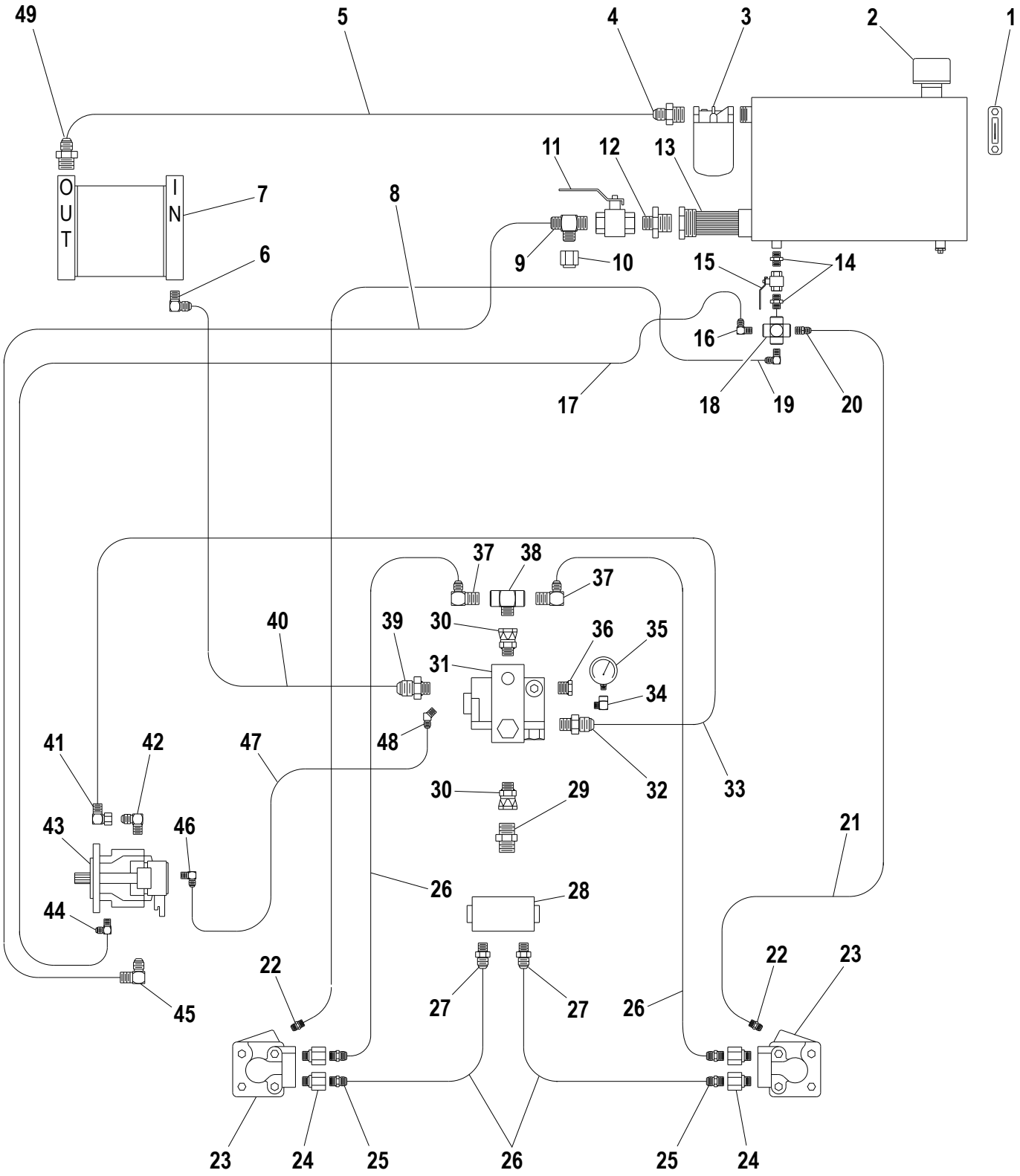

WHEN ORDERING PARTS, BE SURE TO STATE SERIAL NUMBER OF MACHINE

HYDRAULIC SYSTEM

Ref. No.	Part Number	Description	No. Req'd
1	080329	Sight Gauge	1
2	011783	Filler / Breather Cap	1
	011784	Filter Element	1
3	011868	Return Line Filter	1
	011869	Filter Element	1
4	041152	Straight Male Adapter	1
5	012824	Cooler Outlet Hose	1
6	023620	90° Male Adapter	2
7	075523	Hydraulic Oil Cooler	1
8	012508	Suction Hose	1
9	012360	Tee	1
10	012359	Pipe Cap	1
11	007710	Ball Valve	1
12	012361	Reducer Nipple	1
13	011927	Suction Strainer	1
14	022263	Straight Male Adapter	2
15	012365	Ball Valve	1
16	055273	Male 90° Adapter Elbow	2
17	012509	Case Drain Hose	1
18	055271	Female Cross	1
19	012368	Case Drain Hose	1
20	055272	Straight Male Adapter	1
21	012369	Case Drain Hose	1
22	055308	Straight Male Adapter	2
23	012333	Hydraulic Motor	2
24	008562	Straight Male Adapter Union	4
25	055359	Straight Male Adapter	4
26	012366	Hydraulic Motor Work Hose	4
27	041053	Straight Male Adapter	2
28	012334	Flow Divider	1
29	023186	Straight Male Adapter	1
30	012357	Straight Adapter Union	2
31	012336	Hydraulic Valve	1
	012350-03	Hydraulic Valve Handle	1
32	012087	Straight Male Adapter	1
33	012510	Pressure Hose	1
34	FW71892	90° Adapter Elbow	1
35	012044	Pressure Gauge	1
36	012362	Plug	1
37	085013	Male 90° Adapter Elbow	2
38	011625	Female Run Tee	1
39	FW65225	Straight Male Adapter	1
40	012824	Cooler Outlet Hose	1
41	FW71492	90° Adapter Union	1
42	012088	Straight Adapter	1
43	011922	Hydraulic Pump	1
	JDR96934	Pump Gasket	1
44	FW65216	Straight Male Adapter	1
45	012517	90° Male Adapter	1
46	055274	Male 90° Elbow Adapter	1
47	012511	Load Sensor Hose	1
48	012516	45° Male Adapter	1
49	055363	Straight Male Adapter	1

WHEN ORDERING PARTS, BE SURE TO STATE SERIAL NUMBER OF MACHINE

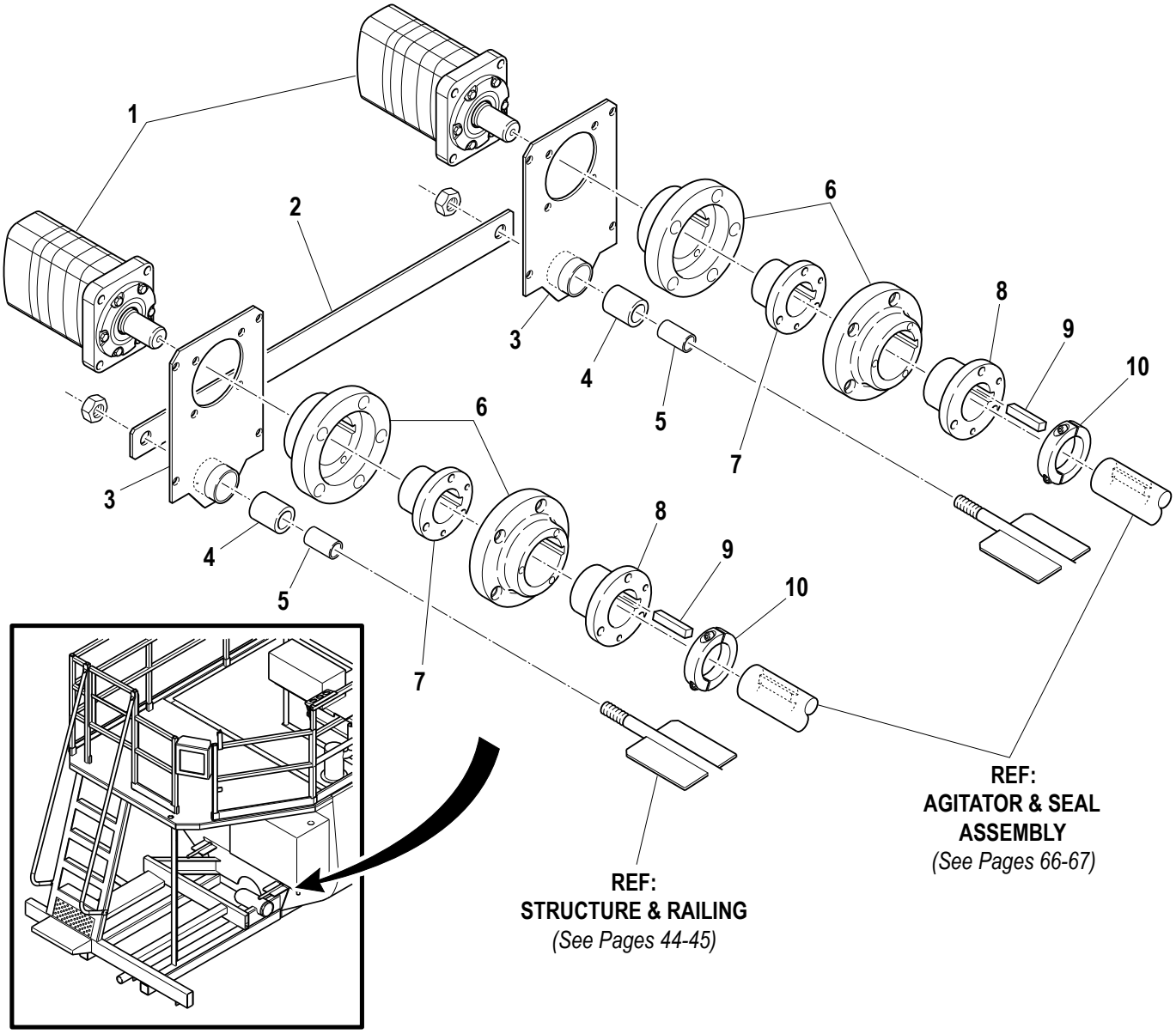

HYDRAULIC AGITATOR DRIVE

Ref. No.	Part Number	Description	No. Req'd
1	012333	Hydraulic Motor	2
2	012522-01	Torsion Bar	1
3	012354	Hydraulic Motor Mount	2
4	012522-02	Rubber Bushing	2
5	012522-04	Torque Arm Insert	2
6	011780	Rigid Coupling	2
7	003055B	Motor Bushing	2
8	055103	Agitator Bushing	2
9	190127-40	Key	2
10	012625	Split Collar	4

WHEN ORDERING PARTS, BE SURE TO STATE SERIAL NUMBER OF MACHINE

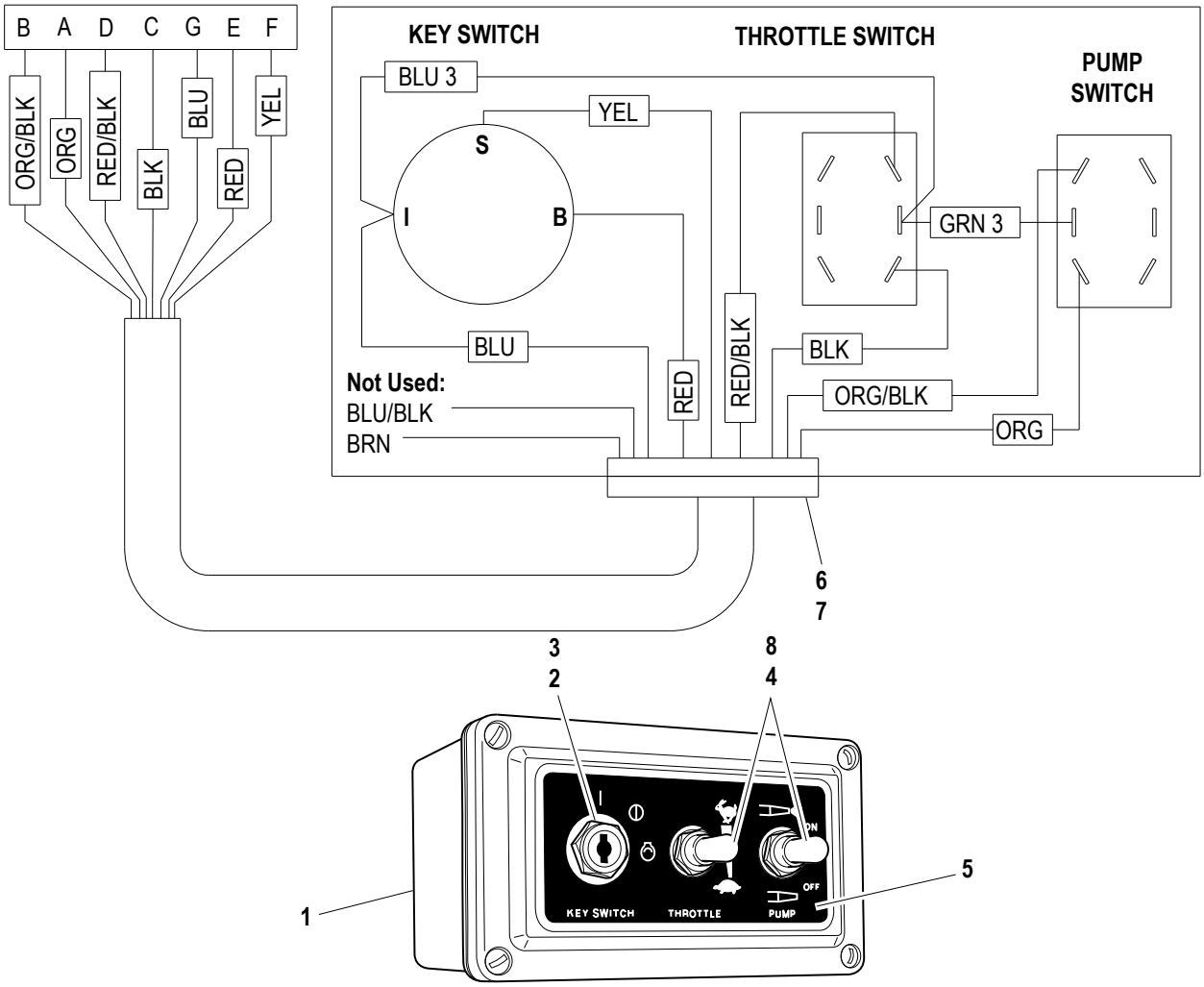

GROUND LEVEL CONTROLS

Ref. No.	Part Number	Description	No. Req'd
1	012779	Ground Level Control Box	1
2	052076	Key Switch	1
3	023076	Key For KeySwitch	1
4	FW71555	Toggle Switch	2
5	012759-02	Ground Level Control Box Decal	1
6	170113	Deutsch Sealing Plug	2
7	080304	Water Tight Fitting	1
8	080526	Switch Boot	2

WHEN ORDERING PARTS, BE SURE TO STATE SERIAL NUMBER OF MACHINE

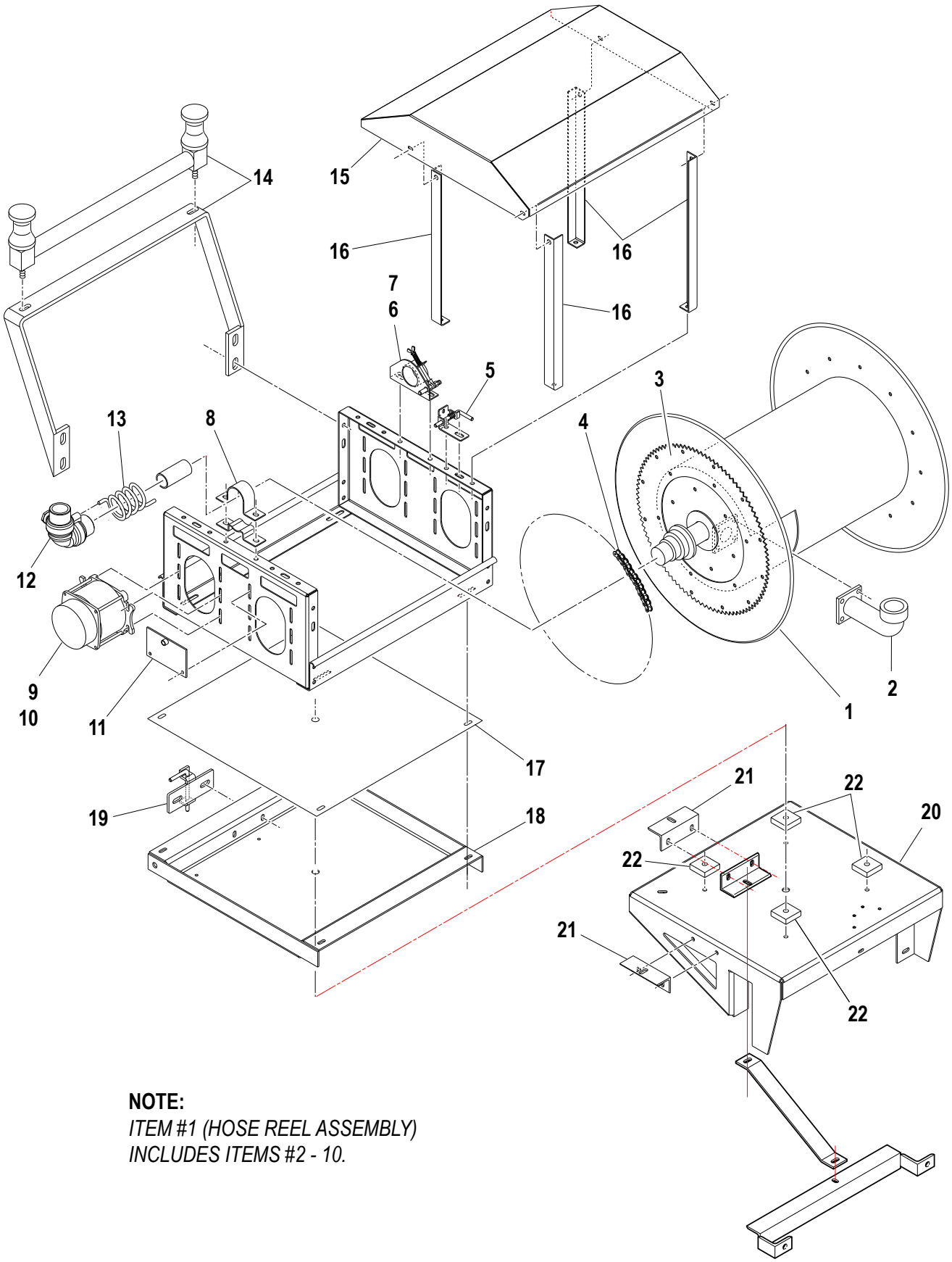

NOTE:
ITEM #1 (HOSE REEL ASSEMBLY)
INCLUDES ITEMS #2 - 10.

WHEN ORDERING PARTS, BE SURE TO STATE SERIAL NUMBER OF MACHINE

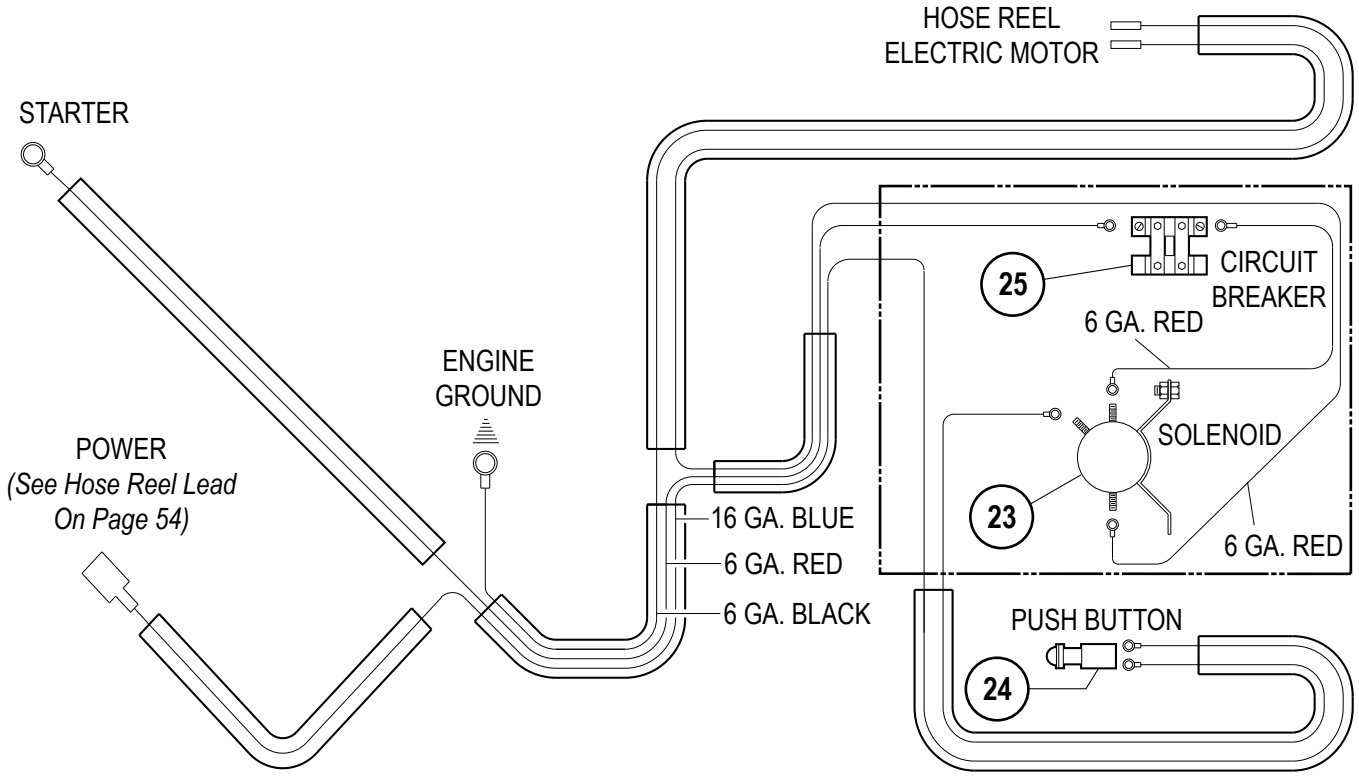

HOSE REEL ASSEMBLY

Ref. No.	Part Number	Description	No. Req'd
1	008212	Hose Reel and Swivel Assembly	1
2	080302	Flanged Riser	1
3	008144	Hose Reel Gear	1
4	008200	Hose Reel Chain - 69" Lg.	1
5	008433	Pinlock w/Brackets Assembly	1
6	008313	Idle Side Bearing	1
7	008111B	Brake Assembly	1
8	008314	Drive Side Bearing	1
9	008188	Electric Motor	1
10	008199	Chair Sprocket - 11 Tooth	1
11	012757-01	Spring Retainer Plate	1
12	003207	1-1/2" Dia. X 90 Degree Swivel Joint	1
13	003299	Torsion Spring	1
14	011894	Hose Roller and Spool Guide	1
15	F330-0077	Hose Reel Canopy	1
16	F330-0094	Hose Reel Canopy Support	4
17	F330-0104	Hose Reel Mount Cover	1
18	F330-0068	Upper Hose Reel Bracket	1
19	052928	Pinlock	1
20	F330-0067	Lower Hose Reel Bracket	1
21	012781	Hose Reel Lock Angle	2
22	012798	Hose Reel Bearing Block	4
		HOSE REEL WIRING	
23	008450	Hose Reel Solenoid Kit	1
24	020886	Push Button	1
25	008420	70 Amp Circuit Breaker	1
	008419	30 Amp Circuit Breaker	1
	011654	40 Amp Circuit Breaker	1

WHEN ORDERING PARTS, BE SURE TO STATE SERIAL NUMBER OF MACHINE

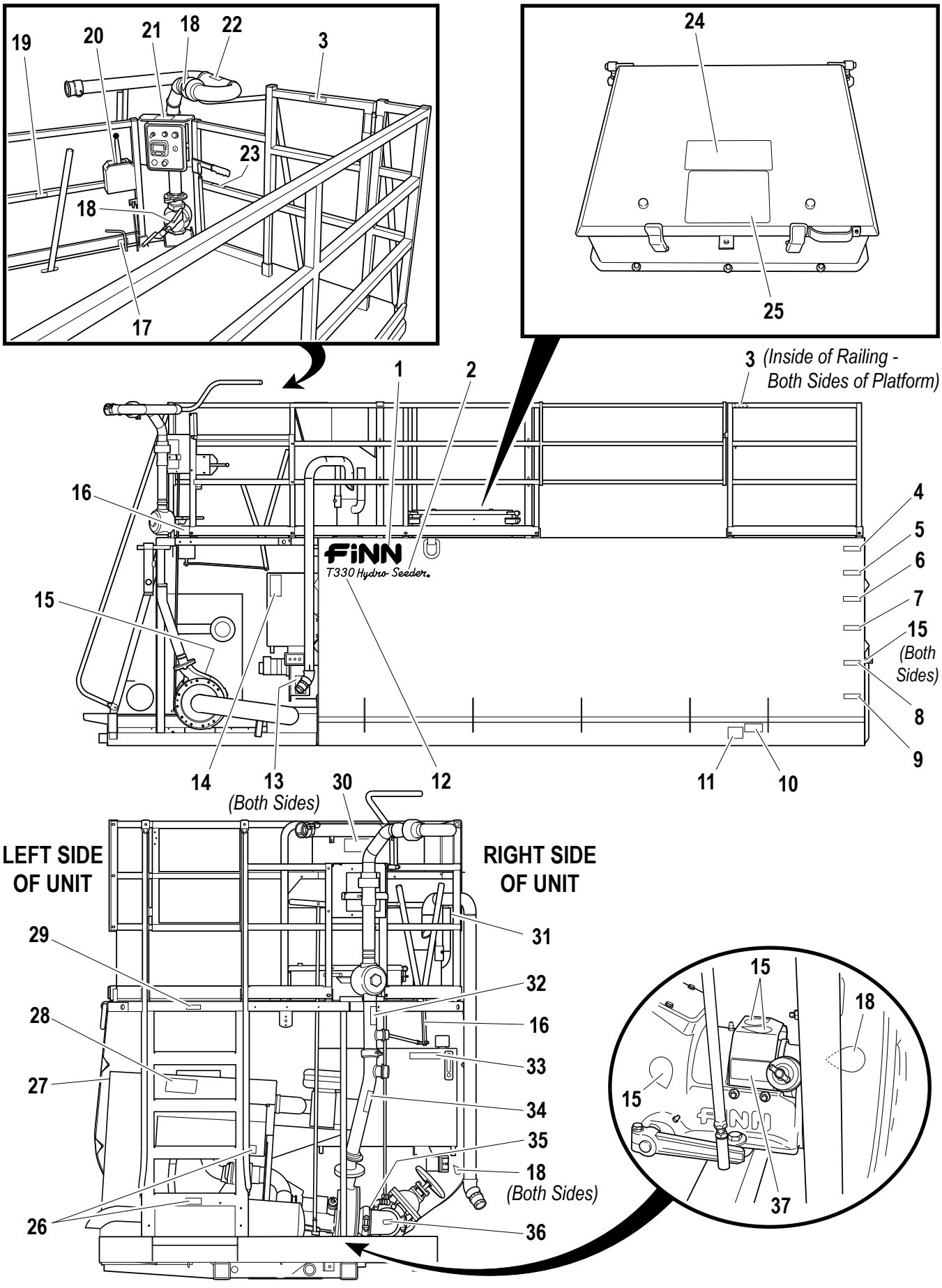

WHEN ORDERING PARTS, BE SURE TO STATE SERIAL NUMBER OF MACHINE

DECALS

Ref. No.	Part Number	Description	No. Req'd
	012820	T170/T280/T330 Decal Sheet	1
1	023174**	"FINN" Decal	2
2	011595**	"HydroSeeder®" Decal	2
3	012821	"Fall Hazard" Decal	3
4	011793	"3,000 Gallon" Decal *(T330 Only)*	1
5	011792	"2,500 Gallon" Decal	1
6	011791	"2,000 Gallon" Decal	1
7	011790	"1,500 Gallon" Decal	1
8	005188	"1,000 Gallon" Decal	1
9	005186	"500 Gallon" Decal	1
10	011690**	FINN Nameplate	1
11	011662**	"U.S. Patent No." Decal	1
12	012661-01**	"T330" Decal	2
	012661-02**	"T280" Decal	2
13	012179	"WARNING! Do Not Operate . . ." Decal	2
14	012687	"CAUTION. Hydraulic System Instructions" Decal	1
15	007231-01	"Service Weekly" Decal	4
16	007230	"Service Daily" Decal	2
17	012819	"BLEEDER VALVE - Open/Close" Decal	1
18	007231	"Service Weekly" Decal	7
19	012817	"RECIRCULATION VALVE - Close/Open" Decal	1
20	008286	"AGITATOR OPERATION" Decal	1
21	005735	"VALVE - Open/Closed" Decal	1
22	011567	"DANGER! Electrocution Hazard . . ." Decal	1
23	012818	"CLUTCH - Engage/Disengage" Decal	1
24	012886-01	"DANGER! Confined Space Hazard . . ." Decal	1
25	012041	"HydroSeeder® Operating Instructions . . ." Decal	1
26	012278	"DANGER! HOT EXHAUST!" Decal	2
27	031462	"WARNING! Burn Hazard . . ." Decal	1
28	031463	"WARNING Sever Hazard . . ." Decal	1
29	012688	"CAUTION. Fall Hazard!" Decal	1
30	020970	"CAUTION. Do Not Ride . . ." Decal	1
31	012597	"IMPORTANT - This is a Tank Vent . . ." Decal	1
32	011569	"CAUTION. Hose Reel Remote . . ." Decal	1
33	012272	"HYDRAULIC FLUID ONLY" Decal	1
34	005216	"DANGER! Do Not Use Remote . . ." Decal	1
35	012180	"Tighten Suction Cover . . ." Decal	1
36	012031	"Valve - Open/Close" Decal	1
37	006869	"Pressure Lubricator" Decal	1
		NOT ILLUSTRATED	
	023391*	"DIESEL FUEL ONLY" Decal	1

NOTES:

* *This Decal is located on the fuel tank on the left side of the unit.*

** *These Decals are not part of the T170/T280/T330 Decal Sheet (012820) and must be ordered separately. All other decals listed above have been listed merely to reference their appropriate locations can onlybe ordered by odering the T170/T280/T330 Decal Sheet (012820). They cannot be ordered separately.*

WHEN ORDERING PARTS, BE SURE TO STATE SERIAL NUMBER OF MACHINE

DISCHARGE HOSE EXTENSIONS

Part Number	Description	No. Req'd
	BOOM TAKE OFF SYSTEM	
007930-02	Boom Discharge Extension Hose Assembly	As Ordered
007929	1-1/2" x 50 ft. Extension Hose w/ Nipples	1 per
002191	2-1/2" Male Brass Adapter	1 per
160768	2-1/2" to 1-1/2" Reducer Bushing	1 per
010544	2-1/2" Female Coupler	1 per
006513	2-1/2" Quick-Coupler Gasket	1 per
	PUMP TAKE OFF SYSTEM	
007930-01	Pump Remote Discharge Hose Assembly	As Ordered
007929	1-1/2" x 50 ft. Extension Hose w/ Nipples	1 per
001207	1-1/2" Male Brass Adapter	1 per
002158	1-1/2" Female Brass Coupler	1 per
006515	1-1/2" Coupler Gasket	1 per
011908	Remote Valve Operation – Heavy Duty	1
007711	Pump Take Off Valve Assembly	1
007710	1-1/2" Full Port Ball Valve	1
002158	1-1/2" Female Brass Coupler	1
160540	1-1/2" x 2" Lg. SCH 40 Nipple	1
007740	Remote Valve Assembly	1
007710	1-1/2" Full Port Ball Valve	1
003243	1-1/2" Aluminum Nipple Pipe	1
160309	1-1/2 " Std. Close Nipple	1
160763	2" x 1-1/2" Tank Bushing	1
006102	2" Female Coupler	1
001207	1-1/2" Male Brass Adapter	1
006621	Wide Ribbon Nozzle Assembly	1
006604	Nozzle, Wide Ribbon	1
006096	2" Male Adapter	1
160761	2" to 1" Reducer Bushing	1
006622	Narrow Ribbon Nozzle Assembly	1
006605	Nozzle, Narrow Ribbon	1
006096	2" Male Adapter	1
160761	2" to 1" Reducer Bushing	1

WHEN ORDERING PARTS, BE SURE TO STATE SERIAL NUMBER OF MACHINE

RECOMMENDED SPARE PARTS & REPAIR KITS

Part Number	Description	No. Req'd
	RECOMMENDED SPARE PARTS	
000698	Pump Seal Lubricator Grease (1 Lb. Can)	2
011919	Suction Pipe Seal	3
002820	Discharge Pipe Seal	3
006722	Recirculation Pipe Seal	2
006513	Nozzle Coupler Gasket	2
006514	Coupler Gasket	2
007469	Lube Sticks For Recirculation and Discharge Valves (Box of 24)	4
012623	Air Cleaner Safety Filter Element (3.75-E2)	1
012622	Air Cleaner Main Filter Element (3.75-E1)	1
JDR123442	Fan Belt	1
JDRE509031	Primary Fuel Filter	1
JDRE517181	Secondary Fuel Filter	1
JDRE504836	Oil Filter	1
031245	Snapper Pin – Boom Holddown	1
011869	Hydraulic Filter Element	2
JDR96934	Hydraulic Pump Gasket	1
	REPAIR KITS	
012397	Swivel Repair Kit	
011920	O-Ring	1
006443	Mechanical Seal Assembly	1
006444	Grease Retainer	1
012733	Grease Seal	2

NOTE: *Recommended spare parts are available to avoid unnecessary down time. Repair Kits are available to recondition parts, which periodically need service.*

WHEN ORDERING PARTS, BE SURE TO STATE SERIAL NUMBER OF MACHINE

Tool Kit

Part Number	Description	No. Req'd
011775	Long Distance Nozzle (Large Hole)	1
011703	Long Distance Nozzle Assembly (Small Hole)	1
001042	Long Distance Nozzle	1
006512	Nozzle Gasket	1
002191	2-1/2" Brass Male Adapter	1
160540	Close Nipple	1
160768	2-1/2" To 1-1/2" Reducer Bushing	1
011706	Wide Ribbon-Small Nozzle Assembly	1
006604	Wide Ribbon-Small Nozzle (50500)	1
002191	2-1/2" Brass Male Adapter	1
160766	2-1/2" To 1" Reducer Bushing	1
011707	Narrow Ribbon-Small Nozzle Assembly	1
006605	Narrow Ribbon-Small Nozzle (25500)	1
002191	2-1/2" Brass Male Adapter	1
160766	2-1/2" To 1" Reducer Bushing	1
011890	Wide Ribbon-Large Nozzle Assembly	1
011861	Wide Ribbon-Large Nozzle (501500)	1
002191	2-1/2" Brass Male Adapter	1
160769	2-1/2" To 2" Reducer Bushing	1
011891	Narrow Ribbon-Large Nozzle Assembly	1
011860	Narrow Ribbon-Large Nozzle (251500)	1
002191	2-1/2" Brass Male Adapter	1
160769	2-1/2" To 2" Reducer Bushing	1
021375	Grease Gun *(Hose Not Included)*	1
020365	Multi-Purpose Grease Cartridge	1
000698	Grease For Pressure Lubricator (1 Lb. Can)	1
007469	Lube Sticks For Discharge and Recirculation Valves (Box of 24)	1
002190	Main Tank Drain Cap with Gasket	1
006513	2-1/2" Quick-Coupler Gasket	1
005220	Impeller Wrench	1
012681A	Touch-Up Paint (FINN Beige - 4.5 Oz. Aerosol)	1
	Engine Operator's Manual	1
	HydroSeeder® Parts & Operator's Manual	1
	Air Flush System Parts & Operator's Manual	1

WHEN ORDERING PARTS, BE SURE TO STATE SERIAL NUMBER OF MACHINE

NOTES

WARRANTY

Finn warrants to the original Purchaser for use (or rental to others for use) all new construction machinery and attachments therefore manufactured by Finn to be free from defects in material and workmanship for a period of 12 months from date of purchase or 1200 hours of use, whichever comes first. Replacement parts provided under the terms of this warranty are warranted for the remainder of the warranty period applicable to the product in which installed, as if such parts were original components of that product. Finn makes no warranty with respect to (a) allied equipment or trade accessories not manufactured by it (such as, but not limited to tires, ignitions, starters, hose, batteries, magnetos, carburetors, engines or like or unlike equipment or accessories), such being subject to the warranty, if any, provided by their respective manufactures; or (b) secondhand, used, altered, or rebuilt machines. Further, the warranty herein expressed shall be rendered null and void to the extent any defect or failure of the products warranted hereby arises out of or is caused by accessories or component parts not manufactured or supplied by Finn, whether same are supplied by Purchaser, dealers or any other party. THE WARRANTY DESCRIBED IN THIS PARAGRAPH SHALL BE IN LIEU OF ALL OTHER WARRANTIES, EXPRESS OR IMPLIED, INCLUDING, BUT NOT LIMITED TO, ANY IMPLIED WARRANTY OF MERCHANTABILITY OR FITNESS FOR A PARTICULAR PURPOSE.

Upon notification of Finn during the above-stated warranty period of any failure to conform to this warranty, and upon inspection by Finn to verify said nonconformity and verify the continuing existence of the warranty period, Finn will provide a new part or a repaired part, whichever Finn elects, to replace the part found to be defective. Such parts will be provided without charge to the Purchaser during normal working hours at a place of business of a Finn dealer or other establishment authorized by Finn to effect said repairs or replacements, but Purchaser shall bear all costs of transporting the product to and from such place of business or establishment. Correction of nonconformities, in the manner and for the period time provided above, shall constitute fulfillment of all liabilities of Finn under this contract.

THE REMEDIES OF THE USER SET FORTH HEREIN ARE EXCLUSIVE, WITHOUT REGARD TO WHETHER ANY DEFECT WAS DISCOVERABLE OR LATENT AT THE TIME OF DELIVERY OF THE PRODUCT TO THE PURCHASER.

The essential purpose of this exclusive remedy shall be to provide the Purchaser with repair or replacement of parts that prove to be defective within the period and under the conditions previously set forth. This exclusive remedy shall not have failed of its essential purpose (as that term is used in the Uniform Commercial Code) provided Finn remains willing to repair or replace defective parts within a commercially reasonable time after it obtains actual knowledge of the existence of a particular defect.

IN NO EVENT SHALL FINN BE LIABLE FOR ANY SPECIAL, CONSEQUENTIAL, INCIDENTAL OR INDIRECT DAMAGES, INCLUDING LOST PROFITS OR LOST COMMERCIAL OPPORTUNITIES, WITH RESPECT TO THE SALE OF THE ABOVE WARRANTED PRODUCT OR ANYTHING DONE TN CONNECTION THEREWITH, OR FOR PROPERTY DAMAGE SUSTAINED BY A PERSON CLAIMING TO BE A THIRD PART BENEFICIARY OF A SURVIVING WARRANTY UNDER THE LAW OF ANY JURISDICTION.

NOTICE

FINN CORPORATION URGES THE USE OF ONLY FINN CORPORATION SUPPLIED PARTS AND ATTACHMENTS TO ASSURE PROPER PERFORMANCE AND SAFE OPERATION OF FINN CORPORATION EQUIPMENT. INSIST ON PARTS AND ATTACHMENTS MANUFACTURED OR SUPPLIED BY FINN CORPORATION WHEN YOU PURCHASE, REPAIR OR REPLACE YOUR FINN EQUIPMENT AND ATTACHMENTS. BECAUSE FINN CORPORATION CANNOT ASSURE THAT PARTS AND ATTACHMENTS NOT MANUFACTURED OR SUPPLIED BY FINN MEET FINN CORPORATION'S QUALITY STANDARDS, SPECIFICATIONS, OR OPERATING REQUIREMENTS, OUR WARRANTY IS NOT EFFECTIVE TO THE EXTENT ANY FAILURE OF OR DEFECT IN A FINN CORPORATION PRODUCT ARISES FROM OR IS CAUSED BY PARTS, ATTACHMENTS OR COMPONENTS NOT ORIGINATING WITH FINN CORPORATION. USE OF FINN CORPORATION EQUIPMENT WITH PARTS AND ATTACHMENTS NOT MANUFACTURED OR SUPPLIED BY FINN COULD RESULT IN PERSONAL INJURY.

Effective December 8, 1995

CALIFORNIA

Proposition 65 Warning

The engine exhaust and some of its constituents are known to the State of California to cause cancer, birth defects, and other reproductive harm.

CALIFORNIA

Proposition 65 Warning

Battery posts, terminals and related accessories contain lead and lead compounds, chemicals known to the State of California to cause cancer and reproductive harm. Wash hands after handling.