FINN CORPORATION®

9281 LeSaint Drive • Fairfield, Ohio 45014
Phone (513) 874-2818 • Fax (513) 874-2914

Bark Blower™

Model BB-605

Operator's Manual

Model **SDA** Serial No. _____

LBBB605-SDA

INDEX

Safety First 1
Safety Summary Section 2-5
Introduction 6
The FINN Bark Blower and Its Functions 6
How the Bark Blower Works 6
Towing Vehicle 6
Selecting a Mulching Material 7
Pre-Start Equipment Check 7
Starting Procedure 8
Crew Members and their Duties 8
The Material Feed System 8-12
- Subsystem 1: Material Handling Group 9
- Subsystem 2: Hydraulic System 9
  - A. Rotary Air Valve Section (Airlock) 10
  - B. Drag Conveyor Floor & Feed Roll 10
  - C. Hose Reel Section 10
- Subsystem 3: Hydraulic Control System 11
- Subsystem 4: Radio Remote Control 12

Bark Blower Power Status Lights 13-14
Mulching with the Bark Blower 15
Bark Blower Adjustments 14-15
- A. Consistent Hose Shock 14
- B. Excessive Auto-Reversing 15
- C. Regularly Tripping The Blower Relief 15
- D. Material Metering Gate 15

Clearing a Blockage 15-16
Quick Dump Feature 16
Dust Control 16

Continued

Feed Conveyor 17
Troubleshooting Chart 18-19
Maintenance 20-24
Lubrication Chart 20-21
Daily 4-8 Hours 22
Weekly 50 Hours 22-23
Floor Chain Adjustment 23-24
First 100 hours 24
Every 3 Months or 3000 Miles 24
Every 12 Months or 12000 Miles 24
Winter Storage 24
Controls/Engine Wiring 25
Main Control Box Wiring 26-27
Tool Kit 28
Warranty 29
Warranty Registration Card 30

SAFETY FIRST

With any piece of equipment, new or used, the most important part of its operation is **SAFETY!**

Finn Corporation encourages you and your employees to familiarize yourselves with your new equipment and to stress safe operation.

The first six pages of this manual are a summary of all the main safety aspects associated with this unit. Be sure to read completely before operation of machine.

This symbol is used throughout the operation and maintenance sections of this manual to call attention to safety procedures.

- Pay Attention -

DANGER: **Immediate hazards which WILL result in severe personal injury or death.**

WARNING: **Hazards or unsafe practices which COULD result in severe personal injury or death.**

CAUTION: **Hazards or unsafe practices which COULD result in minor personal injury or product or property damage.**

IMPORTANT: Indicates that equipment or property damage could result if instructions are not followed.

NOTE: Gives helpful information.

Finn Corporation

CALIFORNIA

Proposition 65 Warning

The engine exhaust and some of its constituents are known to the State of California to cause cancer, birth defects, and other reproductive harm.

CALIFORNIA

Proposition 65 Warning

Battery posts, terminals and related accessories contain lead and lead compounds, chemicals known to the State of California to cause cancer and reproductive harm. Wash hands after handling.

BARK BLOWER SAFETY SUMMARY SECTION

It is important that all operators of this machine are familiar with all the safety aspects mentioned below before operating the machine. Always keep a copy of this manual with the machine. It is the responsibility of the operator of the machine to fully understand this safety section. Remember that YOU are the key to safety. Good safety practices protect not only you but also the people working with and around you. Keep in mind that this safety sheet is written for this type of machine only. Practice all other usual and customary safe working precautions; and above all, remember that safety is up to you.

I. PRE-START EQUIPMENT CHECK (equipment check is to be made with the engine off):

1. Check hitch and hitch bolts, safety chains, lights, brakes and breakaway switch. Verify that the hitch ball or pintle hook is the correct size for the coupler.

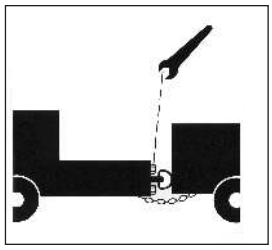

2. Verify that all guards are in place.
3. By carefully looking into the blower hopper and transition, inspect for and remove any foreign objects. Follow OSHA lockout/tagout procedure (29 CFR 1910.147)
4. Inspect all hydraulic hoses and tubes for cracks, bulges or damage. If hose is bad, replace immediately.
5. Inspect the material discharge hose and connections for cracks or damage. If damage is found, replace affected part immediately.

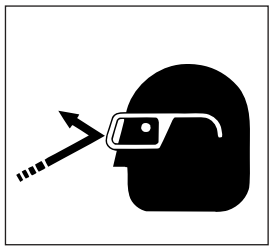

II. MACHINE OPERATION:

1. Always wear safety goggles when operating or feeding the machine. Other safety attire such as safety shoes, ear protection, gloves, hard hats, dust masks, etc., should be worn as required by warning decals on machine, operator's manuals, or job requirements. Remove rings, watches, etc. Avoid loose fitting clothing which may get caught in rotating machinery.
2. Do not override or tamper with the safety shutdown switches on the folding door or discharge. If switches fail, use OSHA lockout/tagout procedure (29 CFR 1910.147) until switches are repaired or replaced.
3. Do not operate the machine without all guards in place.

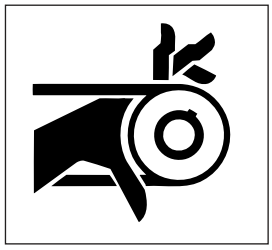

4. Never attempt to connect or disconnect the discharge hose while the engine is running.
5. Make sure that no one is working in or on the machine. Make sure the discharge area is clear of all persons, animals, etc. Signal "All Clear" before starting the engine. Keep unauthorized personnel away from the machine and discharge hose at all times.

6. The driver of the towing vehicle is responsible for the safety of the operator(s) and feeder(s) of the machine. Make sure the driver is aware of and avoids all possible hazards, such as tree limbs, low power lines, etc.
7. Do not allow anyone to ride on the trailer or any other part of the blower for any reason.
8. Never operate machine in an enclosed area without venting the exhaust of both the equipment and the tow vehicle. Deadly carbon monoxide fumes can accumulate.

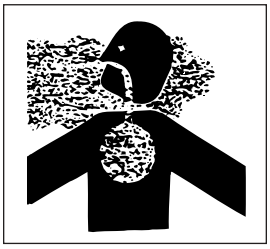

9. Never operate this or any other machinery when fatigued, tired, under the influence of alcohol, illegal drugs or medication. You must be in good physical condition and mentally alert to operate this machine.
10. Never modify the machine. Never remove any part of the machine (except for service and then reinstall before operating).
11. During application, high pressure can be exerted at the end of the hose. Always establish and maintain good footing and hold the hose firmly. Extra personnel may be required to help direct and hold the hose, especially when working on slopes. The proper technique for hose holding personnel is to firmly grasp the hose under both arms. Never hold the hose so it goes between the legs.

12. The blower discharges material at pressures and velocities that can cause severe bodily injury. Do not aim discharge at people, animals, etc. Only aim the discharge at the intended discharge area. Unless properly protected, do not place hand into the discharge stream.

13. Do not open any doors or access panels while machine is in operation. Severe injury may result from rotating parts.

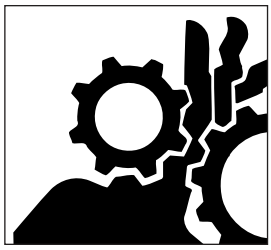

14. Do not attempt to pull anything out of the blower hopper when machine is in operation. Shut down the engine, using OSHA lockout/tagout procedure (29 CFR 1910.147) before removing any foreign objects. Signal “All Clear” before restarting the machine.

15. When leaving the blower unattended for any reason, be sure to:

    A. Shut off conveyor drive.

    B. Shut off vehicle engine and blower engine.

    C. Place transmission of the vehicle in “neutral” or “park”.

    D. Set parking brake firmly.

    E. Lock ignition and take keys with you.

    F. Lock vehicle cab.

    G. If on a steep grade, block the wheels.

    These actions are recommended to avoid unauthorized use, runaway, vandalism, theft and unexpected operation when the equipment is restarted.

16. Do not read, eat or otherwise lose or lessen your attention in any manner while operating the blower. Operating is a full time job.

17. Be careful in getting on and off the blower, especially in wet, icy, snowy or muddy conditions. Clean mud, snow or ice from steps, fenders and footwear.

18. All personnel operating and/or around the machine must be aware that the blower can be controlled via remote control. For safety reasons and to prevent accidental starting, always keep the power switch on the remote receiver in the “OFF” position when the remote control is not being used.

19. Be careful when operating the tarp near power lines. Raising the tarp into power lines may cause severe electrical shock. Always have the tarp either fully open or retracted when transporting the machine.

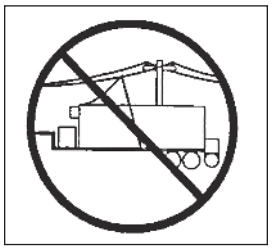

20. Turn slowly and travel on rough surfaces and side slopes carefully, especially with a loaded blower body.

III. MAINTENANCE:

1. Before servicing the machine, turn off engine and allow all moving parts to stop. Disconnect the battery cables to prevent accidental starting of the machine. Tag the engine operating area to show that the machine is being serviced. Use lockout/tagout procedure (29 CFR 1910.147).

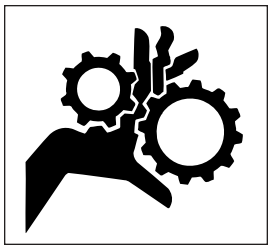

2. Take extreme care when adjusting or replacing knives. Knife edge is very sharp and can cause severe bodily injury.

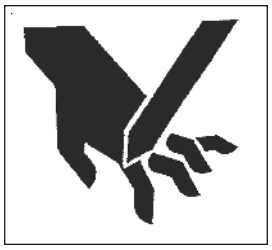

3. Radiator maintenance.
   Liquid cooling systems build up pressure as the engine gets hot. Before removing the radiator cap, stop the engine and let the system cool. Remove the radiator cap only after the coolant is cool.

4. Battery maintenance. Lead-acid batteries contain sulfuric acid which may damage eyes or skin on contact. Always wear a face shield to avoid acid in the eyes. If acid contacts eyes, flush immediately with clean water and get medical attention. Wear rubber gloves and protective clothing to keep acid off skin. Lead-acid batteries produce flammable and explosive gasses. Keep arcs, sparks, flames, and lighted tobacco away.

5. Filling of fuel. Never fill the fuel tank with the engine running, or while smoking or when near an open flame. Never smoke while handling fuel or working on the fuel system. The fumes in an empty container are explosive. Never cut or weld on fuel lines, tanks, or containers. Move at least 10 feet

(3 meters) away from fueling point before starting engine. Wipe off any spilled fuel and let dry before starting engine.

NOTE: Be careful not to allow fuel, lubricant, hydraulic fluid, or cooling fluids to penetrate into the ground or be discharged into the water system. Collect all used fluids and dispose of them properly.

6. It is recommended that only authorized genuine FINN replacement parts be used on this machine.

7. Do not use ether cold start fluid if engine is equipped with glow plug type preheater or other intake manifold type preheater. It could cause an explosion or fire and severe injury or death.

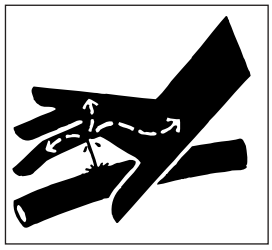

8. Diesel fuel or hydraulic fluid under pressure can penetrate the skin or eyes and cause injury, blindness or death. To check for such leaks, use a piece of cardboard or wood instead of your hand. Pressure may build up in the hydraulic system so use caution when removing the cap.

9. Some parts and assemblies are quite heavy. Before attempting to unfasten any heavy part or assembly, arrange to support it by means of a hoist, by blocking or by use of an adequate arrangement to prevent it from falling, tipping, swinging or moving in any manner which may damage it or injure someone.

10. If repairs require use of a torch or electric welder, be sure that all flammable and combustible materials are removed. Fuel or oil reservoirs must be emptied, steam cleaned and filled with clean water before any cutting or welding on them is attempted. Do NOT weld or cut on any tank containing oil, gasoline or their fumes or other flammable material, or any container whose contents or previous contents are unknown.

CURRENT SET OF SAFETY DECALS

CAUTION Wear proper eye protection when feeding this machine.
22690

WARNING
To prevent serious burning or scalding:
- Pressurized cooling system.
- Allow system to cool.
- Remove cap slowly with gloves on.

012279

WARNING
Do not operate without guards in place.
12179

DANGER
Sharp knives.
P/N 55219

DANGER
HOT EXHAUST
012278

DANGER
Rotating Parts.
Turn off engine and allow all parts to stop completely before opening door, removing guards or attempting service.
20068

WARNING
Turn engine off, disconnect battery, and allow all moving parts to stop before servicing equipment.
22357

CAUTION
Always inspect tow vehicle and equipment hitch before towing. Tighten all hitch bolts and properly connect wiring and saftey chains.
P/N-31227

WARNING
THROWN OBJECT HAZARD
KEEP AWAY
- To prevent serious injury or death from thrown object:
- Stay away from discharge area during operation. Keep others away.
- Do not point discharge toward people, animals or property.

P/N-55280

WARNING
BREAKAWAY SWITCH
Do not use for parking. Attach cable to towing vehicle with slack for turning. Engine battery on trailer must be charged and hooked up for proper breakaway function.
P/N-23423

CAUTION
Both the single and double chains must be crossed under the tongue. They must be oriented in such a manner as to prevent the tongue from dropping to the ground in the event of failure to the hitch, coupler or ball. The Chains must be connected to the towing vehicle so that the slack for each length of chain, between the trailer and the towing vehicle, is the same and must have no more slack when in use than is necessary to permit proper turning of the vehicles. The forward end of the chain must be attached to the towing vehicle, not to the ball, but to the hitch or other frame member. The chain must be looped around the member and hooked back into itself.
P/N-31228

SAFETY CHAIN INSTALLATION

CAUTION
Wear eye protection around operating equipment.
23519

DANGER
Do not raise tarp under high voltage lines.
P/N 045126

WARNING
Rotating fan hazard. Keep hands clear. Shut off engine before servicing.
12251

DANGER
ROTATING HAZARD INSIDE THIS UNIT
NEVER PUT ARMS OR FEET NOR CLIMB ON OR IN THIS UNIT BEFORE FIRST:
- SHUTTING OFF ENGINE AND ALLOWING ALL MOVING PARTS TO STOP
- DISCONNECTING BATTERY CABLES AND FOLLOWING PROPER LOCK-OUT/ TAG-OUT PROCEDURE

FAILURE TO FOLLOW THESE INSTRUCTIONS WILL RESULT IN SERIOUS INJURY OR DEATH
P/N 52177

OPERATION AND MAINTENANCE MANUAL FOR FINN BARK BLOWER

INTRODUCTION:

The FINN Corporation would like to thank you for your latest FINN purchase. In our efforts to maintain a quality and growing relationship with each and every customer, we would like to encourage you to contact us for help with service, genuine replacement parts, or any other information you may require.

THE FINN BARK BLOWER AND ITS FUNCTION:

The FINN Bark Blower is an apparatus for conveying and discharging bulk materials, such as bark mulch, at a fast and uniform rate utilizing a minimum amount of manpower. The product to be used is generally composed and processed and used as a soil amendment, a ground cover for erosion and weed control, or for decorative purposes on landscaping (bark mulch).

This manual is intended to provide step by step instructions on the operation, care, and maintenance of the Bark Blower. In addition, it contains illustrations and a complete list of parts and components for easy identification.

HOW THE BARK BLOWER WORKS:

The bulk material is loaded into the hopper by a loader or by a the feed elevator option. Located at the bottom of the hopper is a drag conveyor, which conveys the bulk material to an opening containing a feed roll. The feed roll and drag conveyor feed the bulk material into a rotary air valve (the “airlock”). The airlock is specifically designed and built to handle tough, fibrous material. The function of the airlock is to take the bulk material into open pockets exposed to the outside air and to convey it to an area where the pocket is closed off. At that point a high pressure air stream, created by the blower, is channeled through the pocket carrying the material off and through the hose for discharge.

IMPORTANT: For best results and to insure safe operation and long life of the equipment, please read and follow all instructions carefully.

TOWING VEHICLE:

The truck used to tow the FINN 605 Bark Blower must be equipped with a 2-5/16” ball or pintle type hitch. This hitch should be mounted as near to the end of the truck bed as possible. The tow vehicle should be fully wired for trailer marker, turn, and stop lights as well as electric brakes, and be sized to pull and stop a 14,500 pound (6,600 kg) trailer. (Loaded 605 assuming 1000 #/yd^3 mulch)

IMPORTANT: When towing tandem axle unit always insure the unit is level applying equal weigh distribution across both axles.

NOTE: When mounting a skid 605 Bark Blower be sure to follow the 605 skid mounting instructions. To insure proper weight distribution and to make sure the bark blower is properly supported by the truck. When mounting a skid model contact FINN Corporation for proper instructions.

SELECTING A MULCHING MATERIAL:

Several factors must be considered when selecting material to convey through the Bark Blower. The variety of the wood used, how it is processed, its moisture content, and the presence of foreign objects all effect the ability of the Bark Blower to convey the mulch at a uniform rate.

The mulch material must be processed and/or screened so that a minimum of material is over 2 inches (5.1 cm) in any direction with no material exceeding 4 inches (10.2 cm) in length. The Bark Blower is not a wood processor. It only reduces mulch fibers when they protrude above the airlock vanes. As the vanes rotate past the knife, the protruding fibers are sheared off. If the mulch contains long or large fibers, and if the wood fibers are harder to cut, then the machine's throughput is reduced. For example, if two mulches have the same mix of material sizes that the Bark Blower rotor must cut, but one is softwood like pine, and one is hardwood such as oak, the pine would go through at a higher rate because it is easier to cut.

There are many different types of material that can be successfully processed through your Bark Blower. These materials are categorized into three main groups. These classifications are important when considering machine performance, material feed rate, and overall operation.

1. Dry Aged Material: Aged double and triple processed bark mulch, saw dust, or wood shavings.

2. "Green" Material: Single process hard wood mulch, "green" wood, or large chunky material.

3. Wet or Heavy Material: Wet heavy bark mulch and compost. Heavy fluid materials such as sand, dirt or gravel.

Most importantly when selecting a material consider the "greenness" of the wood and it's moisture content. Wood that is well seasoned is easier to cut than "green" wood. It also processes better, making a less stringy mulch. High moisture in the mulch may cause it to bridge in the hopper, and pack in the airlock vanes.

Avoid using mulches that contain any hard foreign objects such as rocks, nails, steel, cans, glass, etc. These objects could cause bodily injury as well as damage to machine components, especially the cutting knives in the airlock.

PRE-START EQUIPMENT CHECK:

CAUTION: Equipment check is made with the engine off and all rotating parts stopped.

Safety check to insure operator safety:

1. Check all trailer connections to the towing vehicle, as well as the condition of the safety chains, and bolts connecting the ball coupler or pintle eye to the tongue.
2. Insure that all guards are in place.
3. Tool Kit - see that it contains all prescribed items (see tool kit list, page 23).
4. Lubricate equipment - use hand gun only (see lube chart, page 20-21).
5. Check engine oil - refer to engine operator's manual.
6. Check liquid coolant level in radiator and overflow tank (protected to -34ºF (-37ºC) when shipped).
7. Check fuel level. Use #2-D diesel fuel oil unless operating at ambient temperature below 40ºF (4ºC) or at an altitude exceeding 5000 feet (1524 meters). In these instances use #1-D fuel oil.
8. Inspect the engine air cleaner, the radiator chaff screen, and the blower air cleaner for dust and dirt.

9. Check hopper and transition for foreign objects that could injure workers, or damage equipment.
10. Check the fluid level in the hydraulic tank. Proper level is midway between the upper and lower indicator marks on the sight gauge. (See "Hydraulics" page 9 for oil specification).
11. Install the discharge hose, using clamps and gaskets provided with the machine.

CAUTION: **Do not use radiator type clamps. These clamps may not hold under machine operating pressure.**

STARTING PROCEDURE:

CAUTION: **See safety section of the manual (pages 1-5) before operating the machine.**

1. Place the remote control switch to the "Off" position.
2. If temperature is below 25 degrees F. turn key counter-clockwise to the "Glow Plug" position until the Glow Plug Light goes out.
3. Turn the key clockwise until the starter engages and the engine fires.

NOTE: This engine is equipped with a shutdown system that will shut the engine off if the engine oil pressure drops below 15 psi or if the water temperature reaches 230 degrees F. This shut down system is controlled by a relay that has a 15-second override period at start up. If the key switch is left in the "Run" position too long without the engine running, the Key Reset Light will come on to prompt you to turn the key switch "Off " prior to any further attempts at starting.

4. Check that the "On/Fuse" and the "Door Switches" lights are illuminated. If the green "Door Switches" light is not, check that the door above the airlock is tightly closed. If both lights are off, but the voltmeter is reading correctly, check the 10-amp circuit breaker in the control box. If the voltmeter also shows no reading, then check the 30-amp circuit breaker in the control box.
5. Allow the engine to warm up for three to five minutes.
6. Prior to mulch application, move the throttle position to fully open and allow the governor to control the engine speed. This is a good place to start, refer to page 14 Bark Blower Adjustments for further information on control settings. Governed engine speed should be 2650-2750 rpm under no-load.

CREW MEMBERS AND THEIR DUTIES:

1. The Operator controls the placement of the mulch by moving and aiming the discharge hose.
2. The Loader(s) feed material to the machine by using a skid steer, bucket loader, belt conveyor or optional feed conveyor dumping material directly into the hopper.

THE MATERIAL FEED SYSTEM:

The material feed system on the Bark Blower has been designed to give fast and uniform mechanical feeding. The adjustable feeding rate and the automatic reverse control system allow the use of varied materials while obtaining maximum production. The system is an integration of the following four subsystems, all of which contribute to efficient material flow:

SUBSYSTEM 1: MATERIAL HANDLING GROUP

The four major components of the material handling group are the blower, the drag conveyor or floor, the feed roll, and the rotary air valve (airlock).

The blower is a rotary lobe, positive displacement type unit having two double lobe impellers. It is direct driven off the engine flywheel by a coupling; therefore whenever the engine is running, air is being pumped. The blower is equipped with a relief valve limiting maximum air pressure to 12 psi (.8 bar), an inlet and outlet silencer for noise attenuation, and an inlet air filter.

The drag conveyor receives material from the hopper and conveys it to an opening located at the rear of the hopper, where the feed roll is located. The feed roll insures a uniform feed of bulk material to the airlock. The feed roll is powered by a variable speed hydraulic motor, which also powers the drag conveyor through a chain drive.

The airlock receives the material from the drag conveyor and pressurized air from the blower. Its primary function is to convey the material from the atmospheric air to a sealed chamber where the blower air picks it up and blows it out of the hose. To enable the Bark Blower to convey fibrous material, the airlock housing is equipped with cutting knives, and the vanes on the rotor are angled and hardened. If any long material should protrude above a vane, it will be sheared off before the vane enters the close tolerance of the housing by a scissor like action between the vane and cutting knife. The rotor of the airlock is direct-coupled to a gearbox and driven by a bi-rotational hydraulic motor.

SUBSYSTEM 2: HYDRAULIC SYSTEM

Hydraulic power for the Bark Blower is generated by a fixed displacement hydraulic pump driven off of the engine auxiliary drive. The pump receives hydraulic fluid from the 32 gallon (121 liter) reservoir through a service valve and suction hose, and delivers it to the main system control manifold. The flow delivered to the main valve manifold is monitored by an unloader valve located on the top of the main valve. The unloader valve senses the highest pressure demand in the curcuit, and all excess flow is "dumped" at 200 PSI to the return tank. As the demand for flow or pressure changes, the unloader compensates for these changes by increasing or decresing the flow and pressure sent to the valve bank.

Two pressure gauges at the valve manifold read the valve inlet pressure (top gauge) and the load-sense pressure (bottom gauge). The top gauge should always read about 200 PSI more than the lower gauge. This 200 PSI is called the "margin pressure" and is a measure of the system's ability to respond to changes in the hydraulic circuit. If the margin pressure is too low (below 150 PSI), the system can become "lazy" and not provide enough oil flow for the demand. The margin pressure can be adjusted by turning the set screw located on the unloading valve mounted to the top of the valve bank. The only time the gauges will not show the margin pressure is when one of the hydraulic circuits is stalled, such as if the floor conveyor somehow became jammed. A system relief valve is set for 2650 PSI to protect the hydraulic system.

DESCRIPTION OF VALVE SECTIONS

Figure 2 shows the four valve sections and their locations. Each solenoid operates in only one direction, so circuits that require bi-directional flow have two solenoids, such as the floor and airlock. The valves can be stroked manually by pressing in the black buttons on the end of each solenoid. All of the sections see the same inlet pressure and the load sensing capabilities of the unloader will supply only as much flow as the highest demand circuit requires. If an airlock vane needs to cut a tough piece of bark, the resistance in the

motor will cause a pressure spike in the airlock forward circuit. The unloader will sense this and marginally increase flow sent to the valve bank until the load is overcome and the pressure drops, at which time the unloader will return to its previous output. Each circuit in the hydraulic manifold block is pressure compensated so that each valve section will only accept the oil flow needed. This means that when the overall pressure increases in the system, or in any one circuit, the flow through all the circuits remains relatively constant.

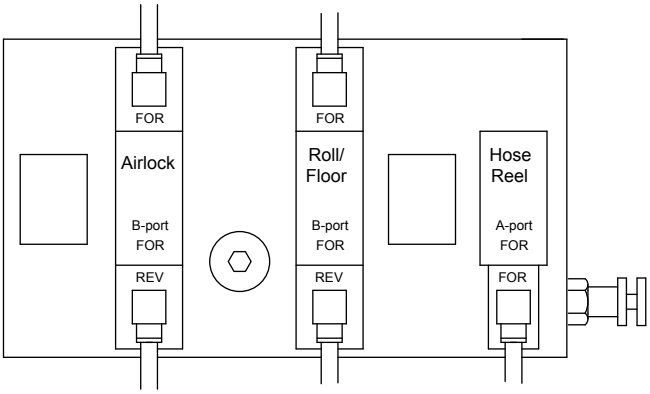

Figure 2

A. ROTARY AIR VALVE (AIRLOCK)

The inside valve section of the manifold runs the airlock. It is a bi-directional proportional valve that is controlled by the Airlock Speed adjustment knob on the control box. The speed can be varied from 0 to 18 RPM, and the unit is factory set for 12 RPM. There is a pressure switch on the forward circuit that is set for 2400 PSI (165 bar) that triggers the auto-reverse function on the airlock. Normal rotation of the airlock is clockwise if looking from the driver side of the machine.

B. DRAG CONVEYOR FLOOR & FEED ROLL

The middle valve controls the floor and feed roll speed. It is an electrically driven proportional valve that is controlled by the Floor Speed toggle switch on the control box. Toggling the switch up or down varies the input voltage to the solenoid and moves the spool in the valve accordingly, allowing more or less oil flow to the floor and feed roll. The feed roll is plumbed in series with the floor, meaning oil flows to the feed roll motor first and then down to the floor motors. This setup automatically causes the floor to slow down if the feed roll begins to jam up, preventing overfeeding of the feed roll. The floor motors are plumbed in parallel so that each one works evenly on the tandem gearbox. There is a pressure switch on the forward circuit that is set for 2050 PSI (139 bar) that triggers the auto-reverse function on the floor.

C. HOSE REEL SECTION

The hose reel section is single direcitonal on/off solonoid. The knob on the bottom face of the valve manifold limits the hose reel speed. The hose reel speed is factory set to 12 RPM.

CAUTION: **Any attempt to increase hose reel speed will result in equipment failure and possibly serious injury to operator and close bystanders.**

SUBSYSTEM 3: HYDRAULIC CONTROL SYSTEM

The hydraulic control system is an electrical system that controls all of the hydraulic functions on the Bark Blower. This 12-volt DC system runs off the engine electrical system. It is a series of relays, timers, analog and digital controllers located in the electrical control box on the rear passenger-side of the machine, which control the solenoid valves in the hydraulic system.

When the “Start” button is pushed the CR1 and CR2 relays in Figure 1 (pg. 13) are energized. This in turn energizes the forward solenoid on the airlock valve section, starting the airlock. If the floor toggle switch is “On”, the floor and feed roll solenoid is delayed and then energized in the forward direction. Timer relay TR3 stops the floor for a brief moment so the airlock always has a chance to clear itself. TR3 should time out after 0.5 seconds, at which point the floor and feed roll will begin to move at a speed relative to the Floor Speed display in the forward direction. As material drops into the top of the airlock, the pressure required to cut the material is monitored by the pressure switch located in the bulkhead connector of the forward direction of the airlock valve section in the manifold. The switch is normally open. When the airlock motor stalls due to the rotor encountering an object it can not cut, high pressure (approximately 2400 psi) is created in the airlock circuit and the pressure switch closes. The amount of time the pressure switch is closed is monitored by the timer relay TR1 in Figure 1. If the switch remains closed for more than 0.5 seconds, TR1 energizes timer relay TR2. TR2 automatically reverses the rotor by energizing the reverse solenoid and de-energizing the forward solenoid. It also de-energizes the floor solenoid, shutting off the floor and feed roll. The airlock will remain in reverse until TR2 times out, which is approximately 1 second. Timer relay TR3 will then restart the drag conveyor after allowing the airlock to clear itself. Located on the control panel is a airlock auto-reverse test button. If the airlock ever becomes jammed pressing this button a few times will generally clear the jammed debris.

The feed roll/floor circuit is capable of being reversed manually from the electrical control box to clear jams. To use the feature, the "Stop" button must be pushed, and the blue and green indictor lights must be on. The "Floor Switch" is a three position switch with a momentary reverse feature. Pushing the switch down to reverse the feed roll and floor sends power to the TR4 relay. The floor and feed roll will reverse until TR4 times out, which is approximately 2 seconds. This setting will clear most jams.

There is a normally open pressure switch located in the bulkhead connector of the forward direction on the feed roll/floor valve section. The pressure switch monitors the pressure in the feed roll/floor circuit. If the pressure in the feed roll/floor circuit reaches the set pressure of the this switch (approximately 2050 psi), an electrical signal is sent to TR4 to trigger the feed roll/floor to auto-reverse for 2 seconds, and then re-start in forward to clear any obstruction.

When the "Stop" button is pushed, power is cut to the relays. This stops the hydraulic motors on the airlock and feed roll by shutting off power to the solenoids. The hydraulics can also be stopped by shutting off the ignition key. Please note that the hydraulics will also stop if the rear door on the feed roll housing is opened and cannot be restarted until they are closed and the "Start" button is pushed.

The hose reel controls are located on the vertical hose reel support, on the passenger side of the unit. The hose reel circuit can only be activated when the swing arm is in the locked position and the safety switch is closed. To wind up the hose the push button is pressed activating the hose reel solenoid valve.

SUBSYSTEM 4: RADIO REMOTE CONTROL

This Bark Blower is equipped with a Radio Remote to control the Material Feed Start and Stop, the floor speed, and the engine throttle. It also contains an Emergency Stop button that activates the Murphy shut-down system on the engine.

If using the Radio Remote, a certain start-up sequence must be followed to activate the remote. When using the remote, start as follows:

1. Place the Radio Remote On/Off switch, located on the control box, to the “Off” position.
2. Place the switch, located on top of the Radio Transmitter, to the “Off” position.
3. Start the engine and allow to warm up as specified in the Bark Blower instruction manual.
4. Place the radio remote switch located on the control box to the “On” position.
5. Place the radio transmitter switch to the “On” position.

To utilize the Material Feed Start/Stop feature of the Radio Remote, the initial start must occur at the Start/Stop station on the Bark Blower. The hard-wired, Start/Stop on the unit is the primary and overriding set of controls. When either the "Stop" button is pushed or a loss of power to the relays occurs (i.e. the rear door on the feed roll housing is opened, or a circuit breaker trips), the Feed Start/Stop feature on the Radio Remote is deactivated. This feature will remain inactive until the initial start is once again made at the machine by pressing the "Start" button.

The Material Increase/Decrease function on the remote can be used to change the floor speed and effectively adjust the output of mulch from the machine. Adjustments to the floor speed made from the remote control will be shown on the "Floor Speed" display on the control box.

The Engine Increase/Decrease function on the remote adjusts the throttle actuator on the engine. For use of the engine RPM function refer to “Mulching with the Bark Blower” on page 13.

Pushing the red button located next to the antenna on the Radio Transmitter activates the Murphy shutdown system. This will shut off the engine, automatically return the engine throttle back to idle, and cut power to all the relays which will shut down all of the hydraulics. To reset the safety system:

1. Flip the Radio Transmitter On/Off switch to “Off”.
2. Re-start the engine.
3. Flip the radio transmitter On/Off switch to “On”.

BARK BLOWER POWER STATUS LIGHTS:

The Bark Blower is equipped with five Power Status Lights on the electrical control box. Each glowing light indicates that a function is ready for operation. A list of the lights as they appear from top to bottom and the meaning of each follows:

***NOTE:** The amber light will deactivate whenever the red "Auto-Reverse" light comes on, or the unit is put into "Remote Feed Standby".

Light Color	Function	Indicator
Blue	ON/FUSE	Should be glowing when engine key is on. Shows power from the ignition switch through the 10 amp circuit breaker in the electrical control box. (Will shut off when feeding)
Green	DOOR SWITCHES	Should be glowing when engine key is on if the rear door is closed and the interlock switches are making proper contact. (Will shut off when feeding)
Amber	FEEDING	Should be glowing whenever the "Start" button is pushed activating the Bark Blower hydraulic system.*
Clear	REMOTE FEED STANDBY	Should be glowing anytime feeding is stopped by pressing the Material Stop button on the Radio Transmitter. Warns other crew members that the Radio Transmitter is active and feeding can begin remotely.*
Red	AUTO-REVERSE	Should be glowing whenever the unit auto-reverses while feeding.*

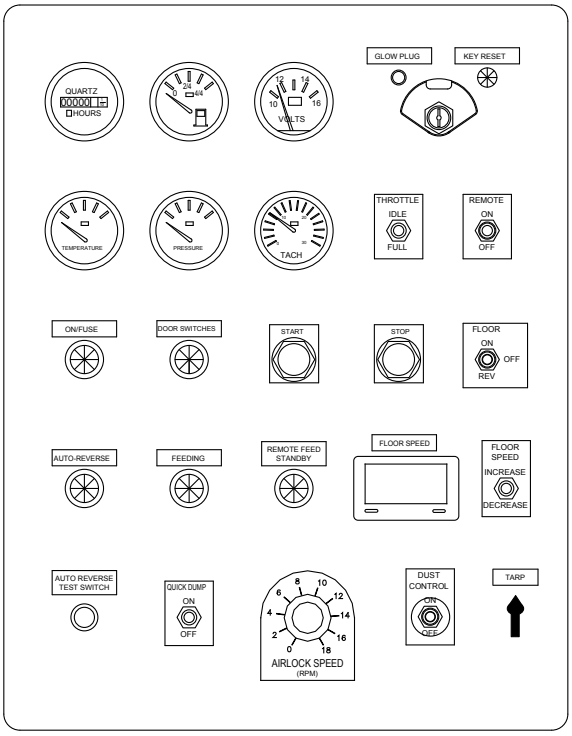

Main Control Panel

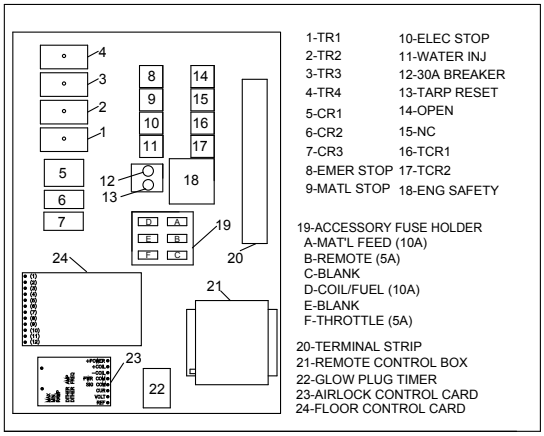

NORMAL TIMER SETTINGS:
#1-TR1 (AIR LOCK PRESS SWITCH) 0.5 SEC.
#2-TR2 (AIR LOCK REVERSE) 1.0 SEC.
#3-TR3 (FLOOR DELAY) 1.5 SEC.
#4-TR4 (FLOOR REVERSE) 1.5 SEC.

(See Page 14pg. for timer instructions.)

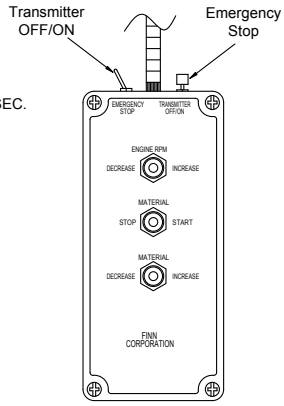

Radio Remote

Figure 1

MULCHING WITH THE BARK BLOWER:

1. Check all areas listed under “Pre-Start Equipment Check”(pages 7).
2. Start the engine following all the steps listed under “Starting Procedure”(pages 8).
3. Place the "Quick Dump" switch to the "Off" position.
4. Set the "Airlock Speed" dial to "18" RPM.
5. Place the "Floor" switch to the “On” position.
6. Activate the radio remote control by first placing the "Remote" switch on the main control panel to the “On” position, and then placing the switch on top of the transmitter to the “On” position.
7. Press the "Start" button on the main control panel to activate the material start/stop feature on the remote control and then quickly push the “Material Start/Stop” switch on the remote transmitter to Stop. The clear “Remote Feed Standby” light should be on.
8. Hold the "Floor Speed" switch in the "Decrease" position for 5 seconds. This will reset the floor speed to zero.
9. With a firm grip on the hose, and the engine throttle at full, press the “Material Start/Stop” switch to Start. The yellow “Feeding” light should activate.
10. Press the "Material Increase" on the remote transmitter and set the floor speed to 2.0.
11. Floor speed can be adjusted from 2.0 for smooth flow. Watch for auto reversing of the air lock, as well as shock waves through the hose. Listen for the relief valve on the blower. Partial plugging in the discharge or hose may cause it to open, causing a high pitched whine, indicating over-feeding of the airlock.
12. Use the “Engine RPM” switch on the remote to decrease and increase air and material flow. A lower engine RPM may require a lower floor speed setting to avoid auto reversing or plugging.
13. At the end of the load, push "Material Stop" and shut down the engine.

BARK BLOWER ADJUSTMENTS:

Your Bark Blower has been designed to be as simple as possible to operate. The feed roll and airlock are designed to create a smooth, consistent flow of material from the hopper to the discharge. However, material conditions can change from one load to the next or from one day to the next. Adjusting the floor speed, engine RPM, and occasionally the metering gate and airlock speeds will allow the Bark Blower to efficiently convey many different types of mulch.

Knowing when and how much to adjust the floor is the key to maximizing the machine’s performance. The floor conveyor speed is controlled by the "Floor Speed" toggle switch on the electrical control box and by the "Material Feed" toggle switch on the remote. The floor speed can be adjusted from 0.0 to 10.0 on the "Floor Speed" display with 0.0 being the slowest (0 RPM) and 10.0 being the fastest (approx. 3 RPM). For most materials, a setting of 2.0 is a good starting point. The floor speed can be increased (1.0 increments are recommended) until certain warning signs appear. They include the following:

A. CONSISTENT HOSE SHOCK

The Bark Blower uses a large amount of air to blow the mulch material through the discharge hose, which can become difficult for an operator to handle. Hose shock is usually due to partial plugging around the discharge. When the material gets dislodged, the larger clumps are shot through the hose and can make it jump significantly. If rough shock waves become consistently tough on the operator at the end of the hose, the floor can be turned down to smooth out the flow of material into the airlock. Cutting back on the engine

RPM can also smooth out hose shock by slowing down the air flow. Be careful not to lower the engine RPM too much, this can cause excessive plugging if there's not enough air to move the material, or if the material slows too much. When blowing wet heavy material slowing the air lock speed can smooth the material flow, by evenly introducing the material to the air steam. Generally the airlock should not be run slower than 10 RPM.

B. EXCESSIVE AUTO-REVERSING

If the airlock starts to auto-reverse regularly, i.e. more than three times a minute, then the airlock is being overfed and the floor should be turned down. Excessive auto-reversing leads to less production than if the floor was just turned down to a lower speed. This condition will occur more often with "green" stringy mulch or less processed material that contains larger chunks of wood that the airlock may have to cut.

C. REGULARLY TRIPPING THE BLOWER RELIEF

The blower on your machine has a relief valve in the air line to protect the blower against a large back pressure that could build if the line becomes plugged. The relief valve, set for 12 PSI(0.8 bar), is located directly behind the blower in the engine area on the driver's side of the machine. A blockage, temporary or otherwise, can trip the relief, which causes a loud whining noise to be heard from the engine area. Occasional blowing through the relief is expected, as long as the machine can clear itself. However, if the relief goes off repeatedly in a 10 second span, then the discharge area or hose is in danger of becoming completely blocked. The floor speed should be immediately reduced until the relief valve is not heard consistently going off. Partial plugging most often occurs with less processed material or if the mulch is wet and dense.

D. MATERIAL METERING GATE

The metering gate is a manually operated gate located inside the rear of the hopper. It is a vertical door that can be moved both up and down, as well as, in and away from the feed roll. When changing the metering gate location, it is important to understand the three main material groups on page 7. The closer the material is to material type 1 (Dry Aged Material), the closer the gate should be to the feed roll, and the further it should be from the floor. The metering gate should be moved away from the feed roll and closer to the floor, the closer the material is to material type 3 (Wet or Heavy Material), leaving material type 2 ("Green" Material) somewhere in the between the two. The better the material is, the less interaction the metering gate should have, the heaver wetter, and harder material, the move interaction the metering gate needs.

CLEARING A BLOCKAGE

If the unit does become plugged and the machine can not clear itself, immediately shut down the engine, either by pressing the emergency stop on the remote or with the ignition key on the control box. Perform the following steps:

1. Disconnect the discharge hose and determine if the blockage is in the airlock discharge. Any blockage should be seen through the outlet. If there is no blockage, then the hose is plugged somewhere.
2. If there is blockage, loosen the two clamps on the front and the rear of the discharge.
3. Remove the discharge.
4. Remove any blockage and clean the discharge of any mulch debris, especially on the gasket surface so that it can seal tightly.

5. Install the discharge outlet and clamp into place.
6. Reconnect the discharge hose if it is not plugged.
7. Restart the machine with the floor off, and run the engine full to clear out the airlock and any mulch lying in the hose.
8. Resume normal operation.

QUICK DUMP FEATURE

The Bark Blower has a Quick Dump feature that can be used to unload bulk material quickly.

1. Shut off the feeding system by pressing the "Stop" button on the control panel.
2. Open the access door above the airlock.
3. Flip the "Quick Dump" switch to "On".

CAUTION: In Quick Dump mode, the feed roll is exposed and can cause material to be thrown from the rear of the machine, especially at higher floor speeds.

4. With the "Floor Switch" On, press the "Start" button to begin unloading material. The material will pass through the feed roll housing and out the rear of the machine over the airlock, which will not be turning.
5. The floor conveyor speed can be adjusted higher for faster unloading.
6. When finished, press the "Stop" button and return the "Quick Dump" switch to the Off position.

WARNING: Do not place hands down inside the airlock vanes to remove material, the knives are sharp and can cause serious injury.

7. Close the rear access door securely using the clamps.
8. The Bark Blower should be run with the "Floor Switch" Off for a few seconds so that the airlock has a chance to clear itself before resuming normal operation. The startup sequence on page 8 will need to be followed again before remote operation can be used.

DUST CONTROL OPTION

The Dust Control System on the Bark Blower is helpful in reducing the amount of dust that can be generated by blowing very dry materials. Water is pumped from the 25 Gal. poly tank down to a nozzle in the discharge pan. A metering valve on the discharge pan allows for varying amounts of water to be sprayed into the mulch as it is blown from the machine. A pressure regulator set for 30 PSI is mounted near the pump and sends any excess flow produced by the pump through the recirculation hose back into the tank. The Dust Control System is activated by turning the Dust Control switch to On when the floor conveyor is operating.

The water pump has an internal thermal switch that will shut off the pump if it gets too hot. A clogged nozzle, clogged pump inlet, or too high of a regulator pressure setting can all cause excessive heat in the pump. If the pump shuts off frequently, make sure the water flow is not restricted and the regulator is not set above 30 PSI.

FEED CONVEYOR OPTION

The feed conveyor option is a single chain flight conveyor located in the front of the unit. The conveyor is intended as a secondary material feeding method to be manually loaded from the tow vehicle. The feed conveyor is designed to supply a steady flow of material to the machine, it is not intended as a loading apparatus.

The feed conveyor system is equipped with a hydraulic speed control valve that is located inside the right front storage panel. The speed control valve should always be turn counter-clockwise in the highest position for maximum operation. The control valve is also equipped with a system pressure relief valve set at 1250 psi. (Tampering with this setting will result in equipment failure).

The system is operated by a quick disconnect "Start/Stop Station". The Start/Stop Station plugs into the front right side of the hitch, and is attached to a coil cord. The start/stop station is to be mounted on the tow vehicle near the conveyor operators during operation. The "Start/Stop Station" "Start" and "Stop" the conveyor, as well as the ability to shut off the feed conveyor in case of emergency.

IMPORTANT: Once the "Start" button on the conveyor "Start/Stop Station" has been pressed, the conveyor is in standby, and will start running once the Bark Blower floor circuit is activated. The Bark Blower floor circuit is activate when the "Floor Switch" is on and the "Material Feed Start" button has been pushed on the main control panel. In standby the conveyor will start and stop in sequence with the "Material Feed" start and stop functions on both the main control panel and the remote control.

DANGER: **Never attempt to perform maintenance, attempt to dislodge foreign debris, or work on the feed conveyor while the engine is running.**

SEED INJECTION: See supplement manual.

TROUBLE SHOOTING CHART:

Symptom	Probable Cause	Remedy
Engine won't start	Engine safety system override delay expired	Return ignition key to "OFF" before starting
	No fuel	Check fuel gauge
	Engine too cold	Preheat glow plugs
Airlock not turning	Green light out on control panel. Blue light on	Make sure rear cleanout door is closed tightly and interlock switches are working properly
	Blue light out on control panel	Check 10A circuit breaker in control box
	Airlock speed control turned down too far	Adjust airlock speed control toward "Max" See page 9.
	Quick Dump feature activated / left on.	Flip "Quick Dump" switch on control box to "OFF"
Floor not turning	Motorized flow control valve closed	Increase material feed control
	Make sure terminal "A+" on timer TR3 has 12V	No: Low voltage, check interlock switches for bad connections or bad switch
	"Out" light on TR3 should come on 1.5 sec after turning floor switch on	No: Bad timer, check settings or replace if bad
	Feed roll /Floor jammed	Check gauge reading: If 2000 psi, push "Stop" button and reverse floor with floor switch

TROUBLE SHOOTING CHART:

Symptom	Probable Cause	Remedy
Airlock constantly auto-reversing	Overfeeding airlock	Decrease floor speed, see pg. 13 for tips
	Dull airlock knives	Check knife clearance, Sharpen or replace if dull or chipped
	Pressure switch time delay set too low	Check timer TR1, should be set for 0.5 sec.
Airlock stalling, not auto-reversing	Pressure switch isn't closing at 2400 PSI	Check pressure switch connections or replace switch if necessary. Check relief setting airlock.
Discharge material pulsing, not smooth	Too much air	Decrease engine throttle and floor speed accordingly
	Airlock turning too fast/slow	Adjust airlock speed, see pg. 13 for tips
	Partial plugging in airlock discharge	Check airlock discharge pan for blockages and air leaks

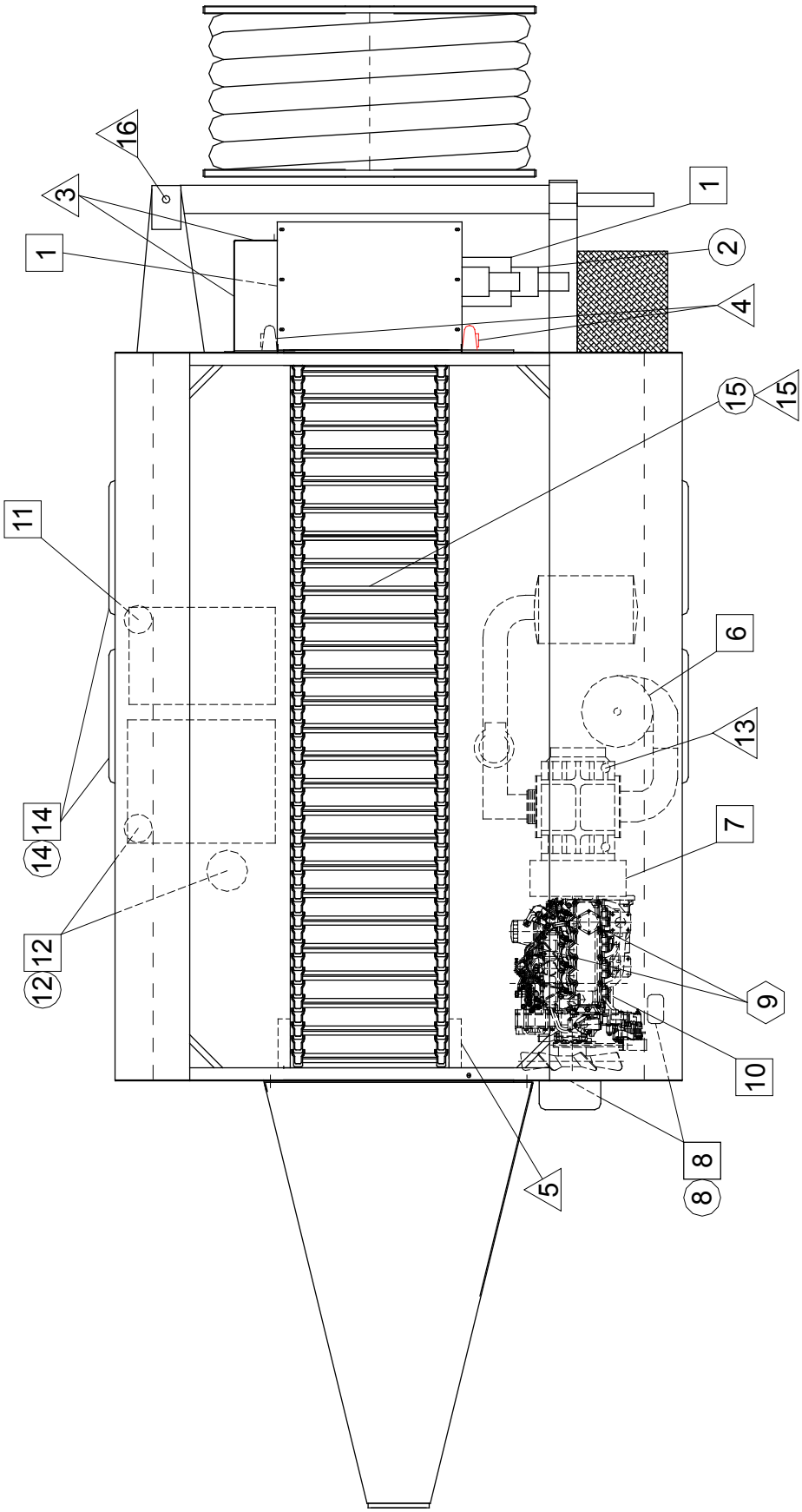

Figure 4

MAINTENANCE CHART

Ref. No.	Location	Lubricant	Frequency	Number
1	Air Lock Bearing	CL	Weekly	2
2	Change Air Lock Gearbox Oil	GO	50,100, then Seasonally	1
3	Feeder Roll Bearing	CL	Weekly	5
4	Floor Pillow Block Bearing	CL	Weekly	2
5	Floor Take-Up Bearing	CL	Weekly	2
6	Check Blower Inlet Filter		Daily	1
7	Check Engine Air Cleaner		Daily	1
8	Check Engine Coolant Level	AF	Daily	1
	Change Engine Coolant	AF	Seasonally	1
9	Change Engine Oil and Filter	HO	See Engine Manual	1
10	Check Engine Oil Level	HO	Daily	1
11	Check Fuel Level	DF	Daily	1
12	Check Hydraulic Oil Level	HO	Daily	1
	Change Hydraulic Oil and Filter	HO	Seasonally	1
13	Check Blower Oil Level	BO	Weekly	2
	Change Blower Oil	BO	50,100, then Seasonally	2
14	Tire Air Pressure		Weekly	4
	Wheel Bearings	CL	Annually	5
15	Lubricate Floor Chain	CH	Seasonally	1
	Check Floor Chain Adjustment		Weekly	1
16	Lubricate Hose Reel Pins	CL	Weekly	2

TIME KEY

DAILY (8 hours) □

WEEKLY (50 hours) △

SEASONALLY (500 hours) ○

SEE ENGINE MANUAL ⬡

LUBRICANT OR FLUID USED

CL	Chassis Lubricant
BO	Blower Oil Mobil SHC-630 Synthetic
AF	50/50 Anti-Freeze and Water Mixture
DF	Diesel Fuel
HO	Hydraulic Oil Mobil DTE-13M
GO	80 W Gear Oil (SAE 80W90)
CH	Mineral oil or chain lubricant

FLUID CAPACITIES

Fuel - 28 Gallons (113 L)
Airlock Gearbox Oil - 20 Oz. (0.6 L)
Engine Coolant - 4 Gallons (15.1 L) 50/50 Mix Only
Hydraulic Oil - 32 Gallons (113 L)
Engine Oil - See Engine Manual
Blower Oil - 16.9 Ounces (500ml)

MAINTENANCE:

CAUTION: **Turn off engine and disconnect battery before servicing equipment.**

DAILY - AFTER EVERY 4 - 8 HOURS OF OPERATION:

1. Check engine and blower air cleaner filters for dirt and debris. Remove and clean with dry, compressed air if necessary.
2. Check engine coolant and oil levels. See engine manual.
3. Check hydraulic oil level in reservoir. The oil should be about half way up the sight glass.
4. Check blower oil level. See blower manual.
5 Clean out front floor chain compartment. Un-clamp and remove the front clean out door from the front of the hopper by first sliding the door towards the passenger side of the unit, then pulling towards the hitch, and finally back towards the drivers side of the unit. Remove any built-up material from under the floor pan and around the sprockets. This will minimize material overflow through the front take up bearings during daily operation.
6. Check fuel level.

WEEKLY - AFTER EVERY 50 HOURS OF OPERATION:

1. Lubricate the bearings on the drag conveyor, airlock, the blower and on the feed roll shaft. See Lube Chart on pages 20-21. Wipe each bearing before lubrication to remove dirt and prevent overheating.
2. Blow out radiator fins with dry compressed air. Do not use a pressure washer. This will damage the radiator fins.
3. Remove and clean air cleaner elements on the engine and rotary blower using dry, clean compressed air. Change if element shows signs of damage
4. Check the oil in the airlock gearbox.
5. Check the gear case on the blower (see blower manual).
6. Check airlock knife for wear, chips, and clearance. To adjust knife:

DANGER: **Knives have very sharp edges that can cause serious injury. Adjust one at a time. Handle with care.**

a) Using a 3/16" allen wrench, remove the four set screw plugs in the access holes on the outside front/rear face of the airlock housing.
b) Loosen the two bolts on each of the four knife clamps in the top of the airlock.
c) The knife adjusting screws are reachable through the access holes in the outside front/rear face of the airlock housing. Using a 5/32" allen wrench, adjust each of the screws in until there is a uniform .003" to .006" (.08 to .15 mm) gap between the knife and rotor. One full turn of the screws will move the knife approximately .055" (1.4 mm). Make sure that the two adjusting screws on each knife clamp are adjusted equally.
d) Tighten the eight bolts on the four knife clamps and replace the set screw plugs in the access holes.

7. If a knife is worn past adjustment and needs replacing:

a) Remove the eight bolts that hold the four knife clamps in place and remove the clamps and knife.

b) Clean the knife shelf so that it is free of debris and smooth.

c) Compare the replacement knife to the one removed. If the new knife is wider, back out the adjusting screws by at least that amount. Count the turns and back the screws out evenly.

d) Lay the knife down on the knife shelf. Insure the knife is installed with the **cutting angle edge facing down** as shown in Figure 2. Loosely install the four knife clamps with the eight knife mounting bolts. Tighten the mounting bolts just enough to hold the knife in position while still allowing it to be moved.

c) Check the clearance between the knife and the rotor end walls and along the rotor vane using a feeler gauge. There should be .003" to .006" (.08 to .15 mm.) gap.

d) Use the jacking screws to close the gap, if necessary. One full turn of the screw moves the knife 0.055 inches (1.4 mm).

e) Tighten mounting bolts.

f) Immediately have removed knife sharpened. Do not attempt to grind the knife by hand. It must be ground straight and true on a surface grinder by an experienced knife sharpener. Grind the knife to the profile shown below:

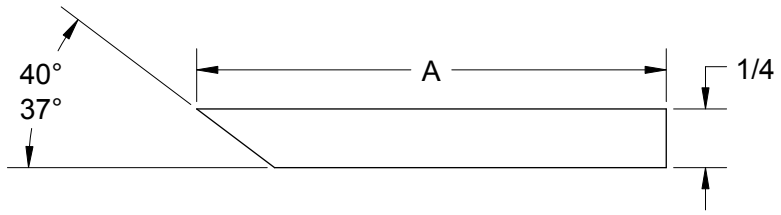

Figure 2

When dimension "A" has been reduced to 1-3/8 inches (3.5 cm) the knife must be discarded.

FLOOR CHAIN ADJUSTMENT:

1. The floor chain tension should be checked every 40 hours. If the chain is too loose, the chain flights can buckle under the floor pan and damage the chain linkages and flights. If the chain is too tight, it can put added wear on the floor bearings and cause excessive chain stretch.
2. Shut the machine off and open the rear access door above the airlock. Remove any built-up material under the floor pan between the chain links and the rear catch pan so that an accurate measurement can be made. Check the tension on the floor chain in the Bark Blower as shown in Fig. 3 below:

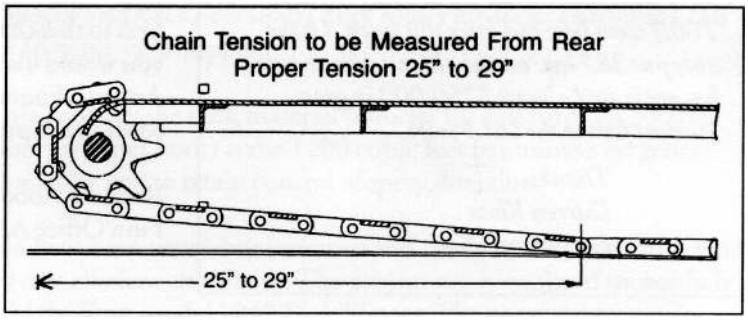

Figure 3

3. To adjust the chain tension, find the take up bearings on either side of the floor sill near the front of the hopper. Using a 1½" wrench, turn the tensioning rod clockwise to tighten the chain and counter-clockwise to loosen it. Always turn both tension rods the same amount so that the chain is always square with the drive shaft. A misaligned chain can jump off the sprocket and buckle.

AFTER FIRST 100 HOURS OF OPERATION:

1. Change engine oil and filter after 100 hours, then every 250 hours after that following engine manufacturer's recommendations.
2. Change the gear box oil on the blower (see blower manual). Change oil every 1000 hours thereafter.
3. Change the gearbox oil on the airlock, using SAE 80W90 oil. Change every 1000 hours thereafter.

EVERY 3 MONTHS OR 3000 MILES (4800 KM):

1. Check and adjust trailer brakes.
2. Re-torque wheel lug nuts (90-120 ft.lbs. (13-17 kg-m)).
3. Check tire condition.

EVERY 12 MONTHS OR 12000 MILES (19300 KM):

1. Inspect and repack wheel bearings.
2. Inspect trailer brake magnets, pads, drums, ect.

WINTER SHUTDOWN AND STORAGE:

1. Blow all material out of machine, turn off engine and disconnect battery cables.
2. Remove the inlet elbow to the blower air chamber and coat internal of impeller cylinder with a rust preventative such as "WD-40". Reconnect piping to prevent foreign debris from entering blower chamber. Rotate drive shaft three or four revolutions. Repeat this process every month or as conditions may require.
3. Remove drain plug in airlock discharge pan.
4. Store machine inside or protect as best as possible.
5. Consult engine manual for best winter shutdown procedure for engine.

IMPORTANT: If the machine is stored outside, do not allow water to sit or ice to form in the airlock or the discharge pan. A severe buildup of rust on the rotor vanes can lock up an airlock and ice expansion can damage the airlock discharge. Also, drain the water tank and water pump hoses to prevent freezing water from damaging the tank and pump.

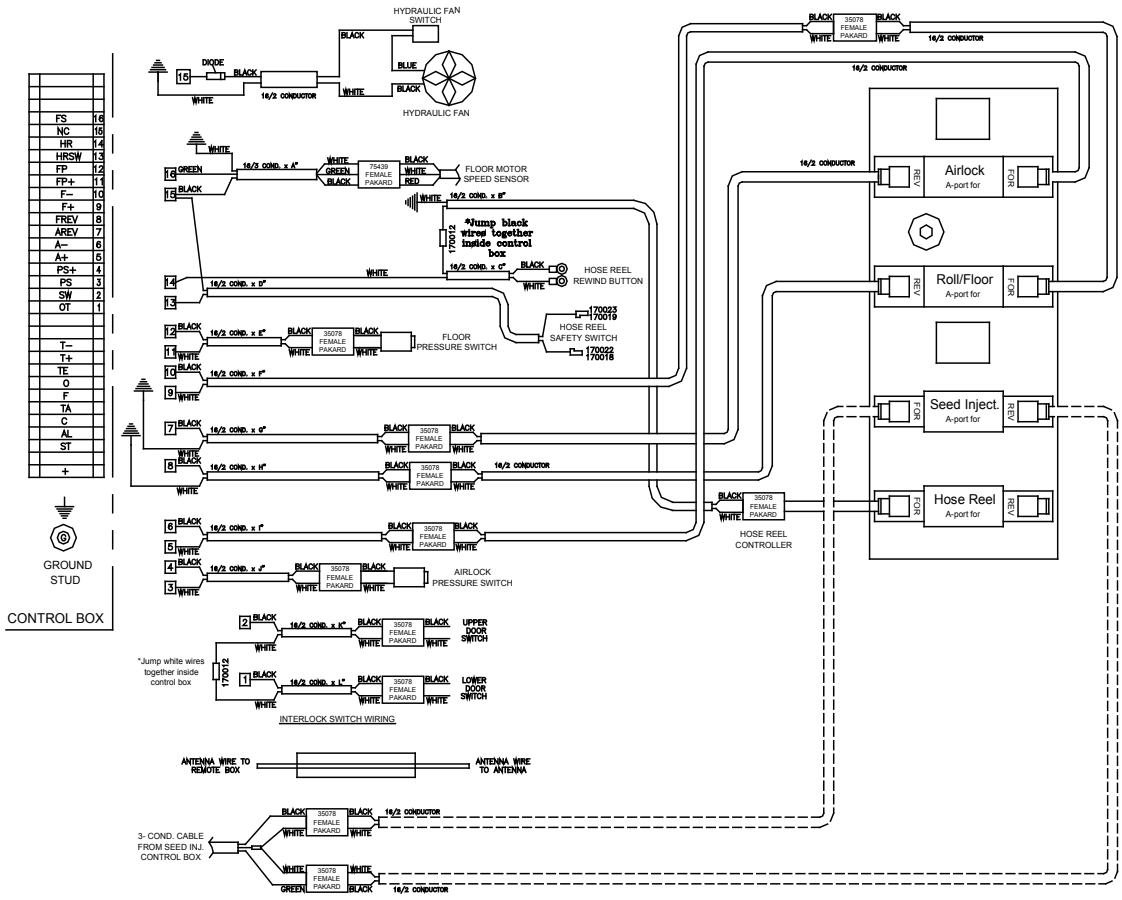

CONTROLS WIRING

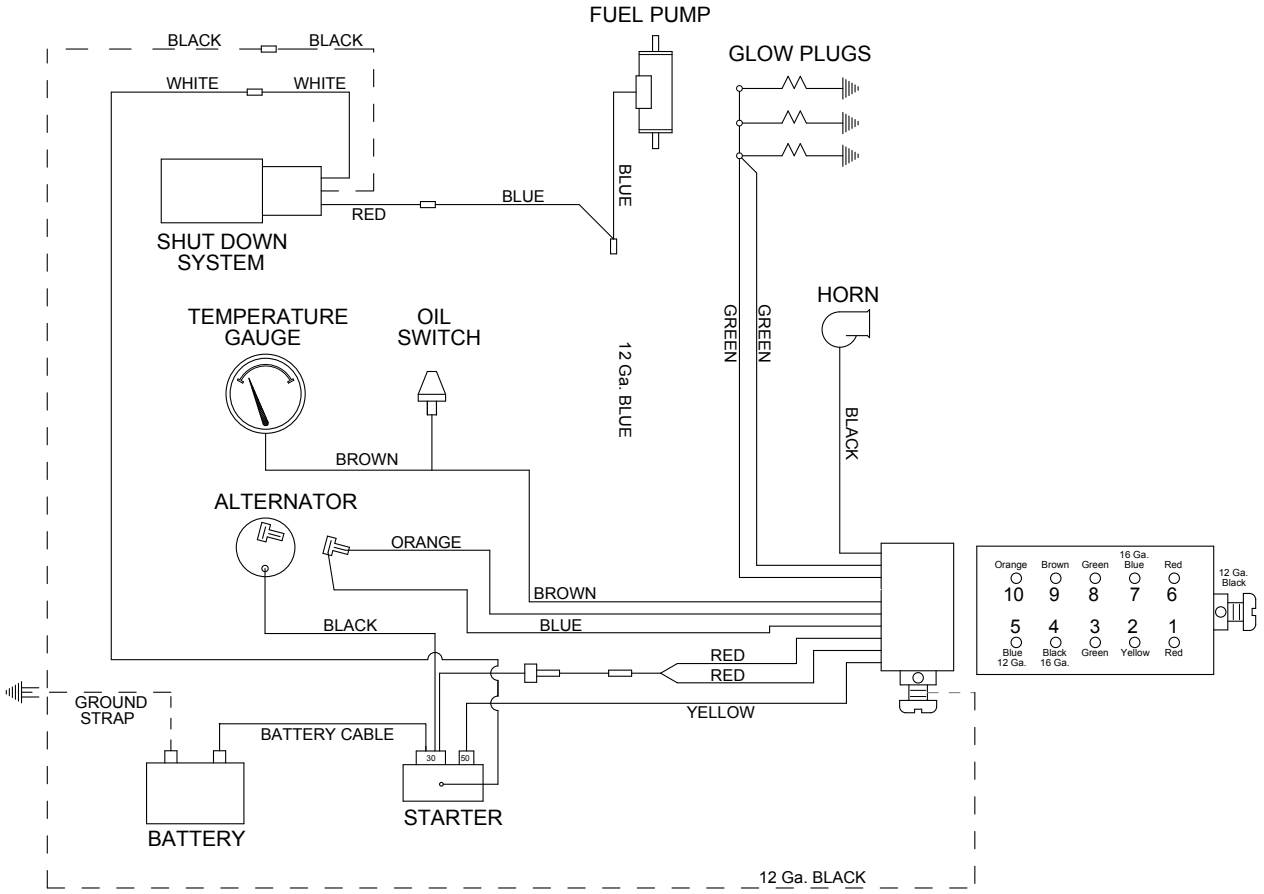

ENGINE WIRING

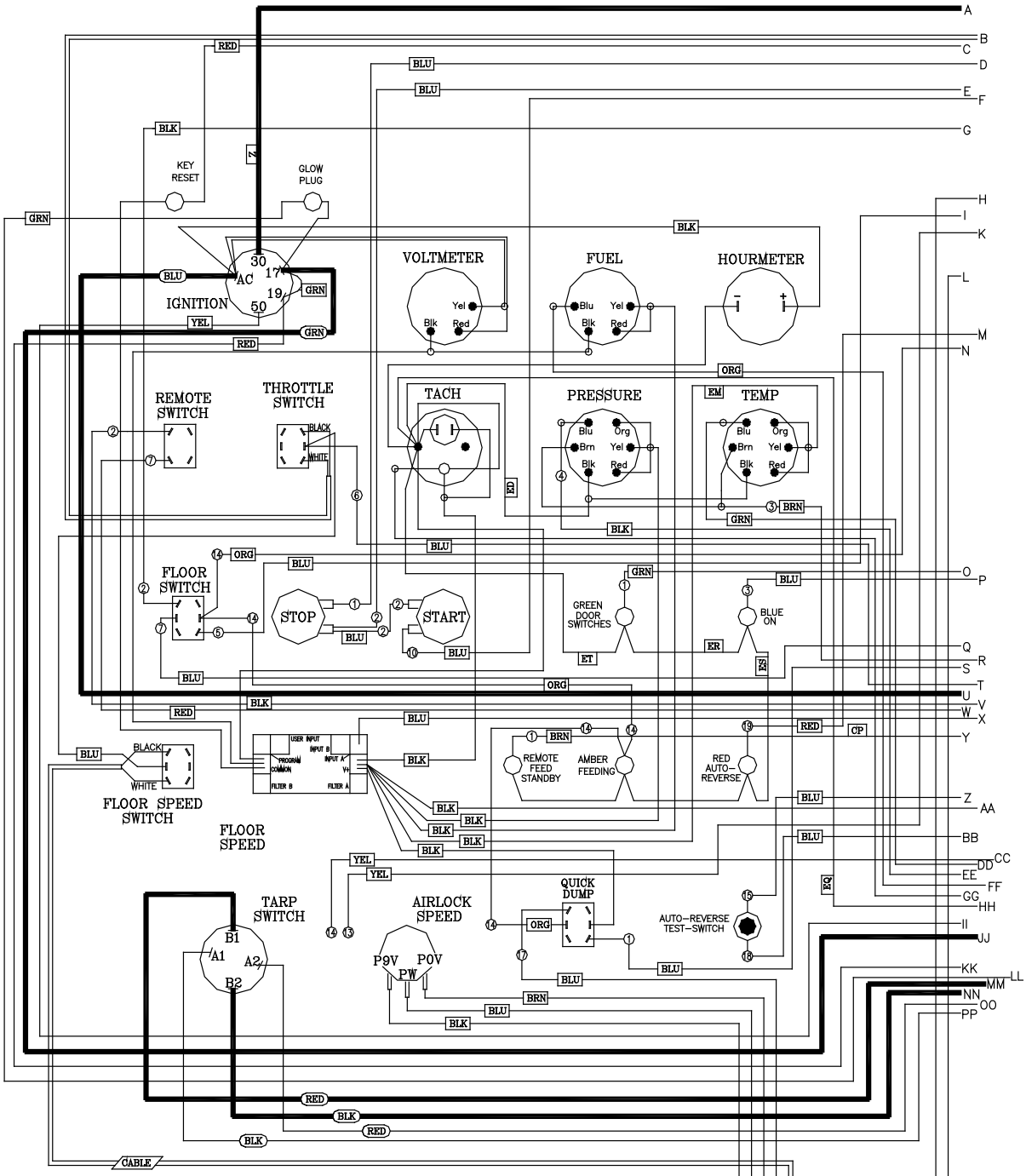

Remote Control Wiring
With Seed Injection

Relay Layout

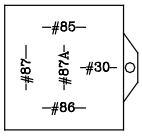

To Ground	GROUND (–)	
To Remote Switch	BATTERY (+)	
	HYD. EMER. STOP	
To TCR1 #86	MASTER CONTROL	
To TCR2 #86	OUTPUT 1	
To TCR1 #87A	OUTPUT 2	
#1	OUTPUT 3	(BLACK 2 COND.)
#11	OUTPUT 4	(WHITE 2 COND.)
To Floor Card — CABLE	OUTPUT 5	(WHITE 2 COND.)
	OUTPUT 6	(BLACK 2 COND.)
Seed Injection — CABLE	OUTPUT 7	
	OUTPUT 8	

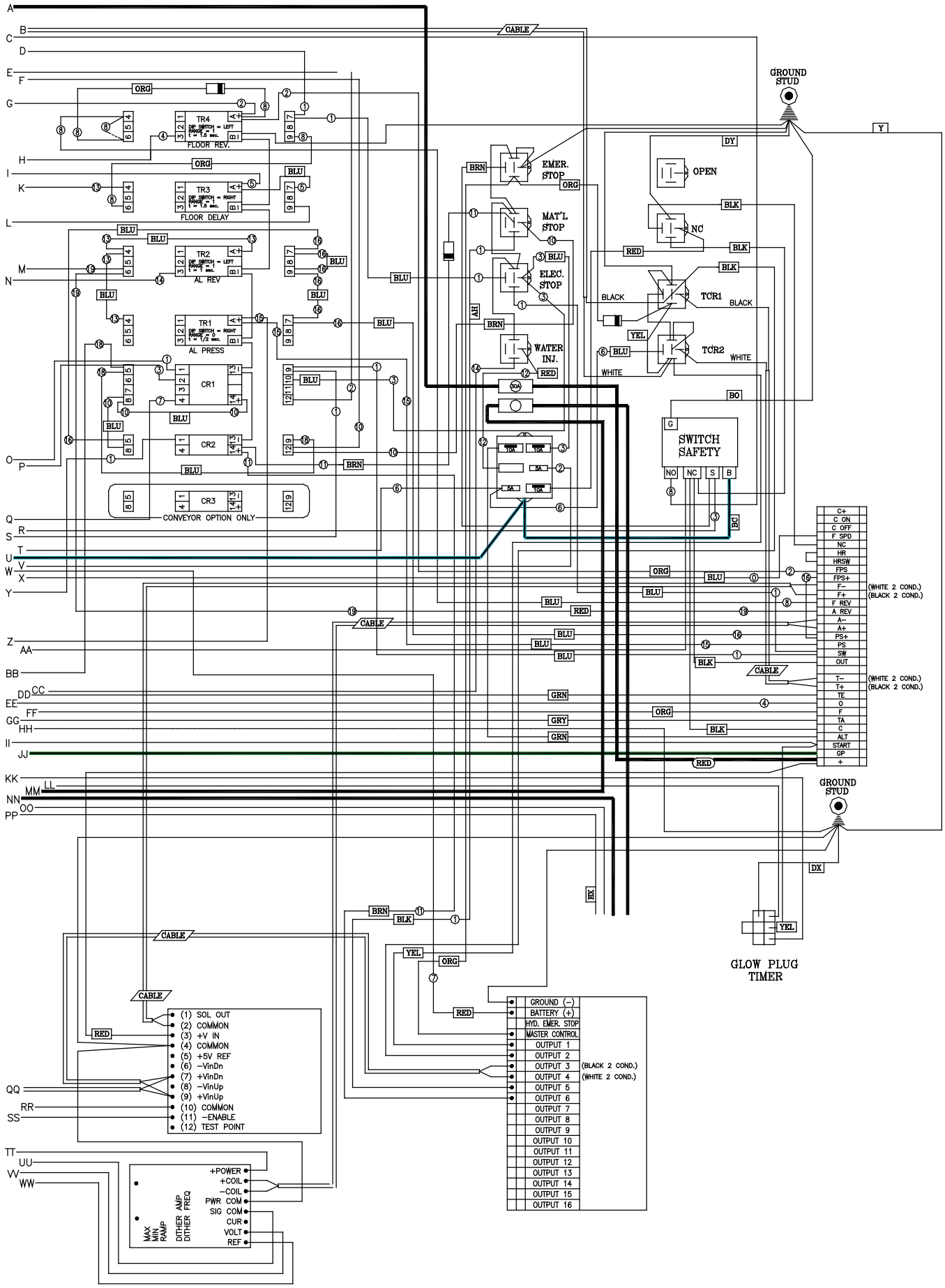
TR4
DIP SWITCH = LEFT
RANGE = 1
t = 1.2 sec.
FLOOR REV.
TR3
DIP SWITCH = RIGHT
RANGE = 1
t = 1.5 sec.
FLOOR DELAY
TR2
DIP SWITCH = LEFT
RANGE = 1
t = 1 sec.
AL REV
TR1
DIP SWITCH = RIGHT
RANGE = 0
t = 1/2 sec.
AL PRESS
CR1
CR2
CR3
CONVEYOR OPTION ONLY
CABLE
GROUND STUD
EMER. STOP
MAT'L STOP
ELEC. STOP
WATER INJ.
OPEN
NC
TCR1
TCR2
BLACK
WHITE
SWITCH SAFETY
NO
NC
S
B
C+
C ON
C OFF
F SPD
NC
HR
HRSW
FPS
FPS+
F–
F+
F REV
A REV
A–
A+
PS+
PS
SW
OUT
T–
T+
TE
O
F
TA
C
ALT
START
GP
+
(WHITE 2 COND.)
(BLACK 2 COND.)
GLOW PLUG TIMER
(1) SOL OUT
(2) COMMON
(3) +V IN
(4) COMMON
(5) +5V REF
(6) –VinDn
(7) +VinDn
(8) –VinUp
(9) +VinUp
(10) COMMON
(11) –ENABLE
(12) TEST POINT
GROUND (–)
BATTERY (+)
HYD. EMER. STOP
MASTER CONTROL
OUTPUT 1
OUTPUT 2
OUTPUT 3
OUTPUT 4
OUTPUT 5
OUTPUT 6
OUTPUT 7
OUTPUT 8
OUTPUT 9
OUTPUT 10
OUTPUT 11
OUTPUT 12
OUTPUT 13
OUTPUT 14
OUTPUT 15
OUTPUT 16
(BLACK 2 COND.)
(WHITE 2 COND.)
+POWER
+COIL
–COIL
PWR COM
SIG COM
CUR
VOLT
REF
MAX
MIN
RAMP
DITHER AMP
DITHER FREQ

TOOL KIT

Part Number	Description	No. Req'd
FW71883	Touch Up Paint	1
	Engine Operator's Manual	1
	Blower Operator's Manual	1
	Radio Remote Control Manual	1
	Bark Blower Operator's/Parts Manual	1

DISCHARGE HOSE

Part Number	Descritpion	No. Req'd
055339A	100' Discharge Hose Ass'y w/ Aluminum Couplers	1
055398A	50' Discharge Hose Ass'y w/Aluminum Couplers	1
055374A	Aluminum Male Adapter	1
055375A	Aluminum Female Coupler	1
045303	Hot Air Hose	1
052878	Discharge Deflector	1
055337	Shoulder Strap	1

WARRANTY

Finn warrants to the original Purchaser for use (or rental to others for use) all new construction machinery and attachments therefore manufactured by Finn to be free from defects in material and workmanship for a period of 12 months from date of purchase or 1200 hours of use, whichever comes first. Replacement parts provided under the terms of this warranty are warranted for the remainder of the warranty period applicable to the product in which installed, as if such parts were original components of that product. Finn makes no warranty with respect to (a) allied equipment or trade accessories not manufactured by it (such as, but not limited to tires, ignitions, starters, hose, batteries, magnetos, carburetors, engines or like or unlike equipment or accessories), such being subject to the warranty, if any, provided by their respective manufactures; or (b) secondhand, used, altered, or rebuilt machines. Further, the warranty herein expressed shall be rendered null and void to the extent any defect or failure of the products warranted hereby arises out of or is caused by accessories or component parts not manufactured or supplied by Finn, whether same are supplied by Purchaser, dealers or any other party. THE WARRANTY DESCRIBED IN THIS PARAGRAPH SHALL BE IN LIEU OF ALL OTHER WARRANTIES, EXPRESS OR IMPLIED, INCLUDING, BUT NOT LIMITED TO, ANY IMPLIED WARRANTY OF MERCHANTABILITY OR FITNESS FOR A PARTICULAR PURPOSE.

Upon notification of Finn during the above-stated warranty period of any failure to conform to this warranty, and upon inspection by Finn to verify said nonconformity and verify the continuing existence of the warranty period, Finn will provide a new part or a repaired part, whichever Finn elects, to replace the part found to be defective. Such parts will be provided without charge to the Purchaser during normal working hours at a place of business of a Finn dealer or other establishment authorized by Finn to effect said repairs or replacements, but Purchaser shall bear all costs of transporting the product to and from such place of business or establishment. Correction of nonconformities, in the manner and for the period time provided above, shall constitute fulfillment of all liabilities of Finn under this contract.

THE REMEDIES OF THE USER SET FORTH HEREIN ARE EXCLUSIVE, WITHOUT REGARD TO WHETHER ANY DEFECT WAS DISCOVERABLE OR LATENT AT THE TIME OF DELIVERY OF THE PRODUCT TO THE PURCHASER.

The essential purpose of this exclusive remedy shall be to provide the Purchaser with repair or replacement of parts that prove to be defective within the period and under the conditions previously set forth. This exclusive remedy shall not have failed of its essential purpose (as that term is used in the Uniform Commercial Code) provided Finn remains willing to repair or replace defective parts within a commercially reasonable time after it obtains actual knowledge of the existence of a particular defect.

IN NO EVENT SHALL FINN BE LIABLE FOR ANY SPECIAL, CONSEQUENTIAL, INCIDENTAL OR INDIRECT DAMAGES, INCLUDING LOST PROFITS OR LOST COMMERCIAL OPPORTUNITIES, WITH RESPECT TO THE SALE OF THE ABOVE WARRANTED PRODUCT OR ANYTHING DONE TN CONNECTION THEREWITH, OR FOR PROPERTY DAMAGE SUSTAINED BY A PERSON CLAIMING TO BE A THIRD PART BENEFICIARY OF A SURVIVING WARRANTY UNDER THE LAW OF ANY JURISDICTION.

NOTICE

FINN CORPORATION URGES THE USE OF ONLY FINN CORPORATION SUPPLIED PARTS AND ATTACHMENTS TO ASSURE PROPER PERFORMANCE AND SAFE OPERATION OF FINN CORPORATION EQUIPMENT. INSIST ON PARTS AND ATTACHMENTS MANUFACTURED OR SUPPLIED BY FINN CORPORATION WHEN YOU PURCHASE, REPAIR OR REPLACE YOUR FINN EQUIPMENT AND ATTACHMENTS. BECAUSE FINN CORPORATION CANNOT ASSURE THAT PARTS AND ATTACHMENTS NOT MANUFACTURED OR SUPPLIED BY FINN MEET FINN CORPORATION'S QUALITY STANDARDS, SPECIFICATIONS, OR OPERATING REQUIREMENTS, OUR WARRANTY IS NOT EFFECTIVE TO THE EXTENT ANY FAILURE OF OR DEFECT IN A FINN CORPORATION PRODUCT ARISES FROM OR IS CAUSED BY PARTS, ATTACHMENTS OR COMPONENTS NOT ORIGINATING WITH FINN CORPORATION. USE OF FINN CORPORATION EQUIPMENT WITH PARTS AND ATTACHMENTS NOT MANUFACTURED OR SUPPLIED BY FINN COULD RESULT IN PERSONAL INJURY.

Effective December 8, 1995

CALIFORNIA

Proposition 65 Warning

The engine exhaust and some of its constituents are known to the State of California to cause cancer, birth defects, and other reproductive harm.

CALIFORNIA

Proposition 65 Warning

Battery posts, terminals and related accessories contain lead and lead compounds, chemicals known to the State of California to cause cancer and reproductive harm. Wash hands after handling.