FINN CORPORATION®

9281 LeSaint Drive • Fairfield, Ohio 45014
Phone (513) 874-2818 • Fax (513) 874-2914
Sales: 1-800-543-7166

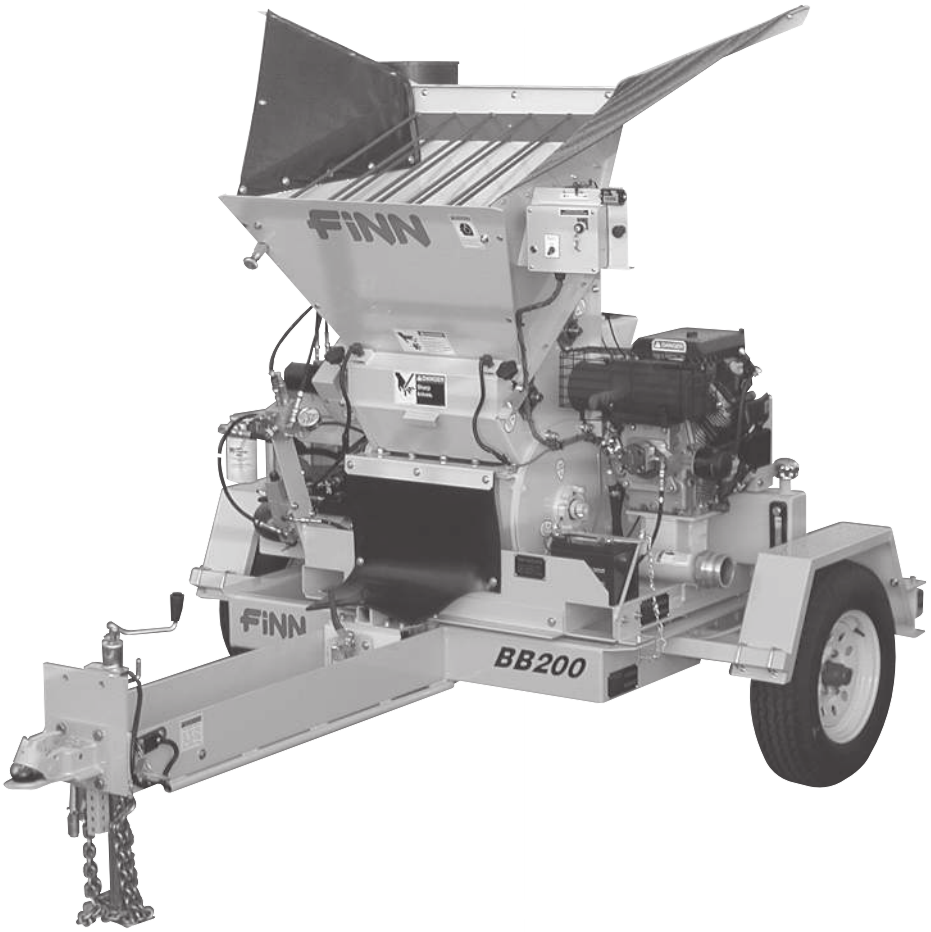

Bark Blower™

Model BB-200

Parts and Operator's Manual

Model **SE** Serial No._____

LBBB200-SE

INDEX

SAFETY FIRST 1

BARK BLOWER SAFETY SUMMARY SECTION 2-5

Current Set of Safety Decals 5

OPERATION AND MAINTENANCE. 6-20

The FINN Bark Blower and Its Function 6

How the Bark Blower Works 6

Towing Vehicle 6

Selecting a Mulching Material 6-7

Pre-Start Equipment Check 7

Safety Check To Insure Operator Safety 7

Starting Procedure 8

Crew Members and their Duties 8

The Material Feed System. 8-10

Subsystem 1: Material Handling Group. 8-9

Subsystem 2: Hydraulic System 9

A. Rotary Air Valve 9

B. Feed Rolls. 9-10

Subsystem 3: Hydraulic Control System 10

Mulching with the Bark Blower. 11

Troubleshooting Chart 11-12

Electronic Timer Range Programming Instructions 12-14

Select Mode of Operation 12-13

Select Time Range 13-14

Cleaning and Maintenance 14-19

After First 4-8 Hours of Operation 14-15

Weekly After Every 50 Hours of Operation 15-16

After First 100 Hours of Operation 16

Every 3 Months or 3000 Miles (4,800 KM) 17

Every 12 Months or 12000 Miles (19,300 KM) 17

Winter Shutdown and Storage. 17

Lubrication Chart 18-19

Continued

INDEX CONTINUED

Notes 20

PARTS MANUAL 21-45

- Notes 22
- Pictorial Reference 23
- Trailer and Carriage Assemblies 24-25
- Axle and Hub Parts 26
- Brake Assemblies 27
- Airlock Assembly 28-29
- Feeder Parts 30-31
- Hopper 32-33
- Drive Components 34-35
- Blower Components 36-37
- Hydraulic Parts 38-39
- Engine and Control Box Wiring 40-41
- Trailer Wiring 42
- Tool Kit, Discharge Hose and Recommended Spare Parts 43
- Decal and Plate Locations 44-45

WARRANTY 46

WARRANTY REGISTRATION CARDS 47-48

SAFETY FIRST

With any piece of equipment, new or used, the most important part of its operation is **SAFETY!**

Finn Corporation encourages you and your employees to familiarize yourselves with your new equipment and to stress safe operation.

The first six pages of this manual are a summary of all the main safety aspects associated with this unit. Be sure to read completely before operation of machine.

This symbol is used throughout the operation and maintenance sections of this manual to call attention to safety procedures.

- Pay Attention -

DANGER: **Immediate hazards which WILL result in severe personal injury or death.**

WARNING: **Hazards or unsafe practices which COULD result in severe personal injury or death.**

CAUTION: **Hazards or unsafe practices which COULD result in minor personal injury or product or property damage.**

IMPORTANT: Indicates that equipment or property damage could result if instructions are not followed.

NOTE: Gives helpful information.

CALIFORNIA

Proposition 65 Warning

The engine exhaust and some of its constituents are known to the State of California to cause cancer, birth defects, and other reproductive harm.

Finn Corporation

CALIFORNIA

Proposition 65 Warning

Battery posts, terminals and related accessories contain lead and lead compounds, chemicals known to the State of California to cause cancer and reproductive harm. Wash hands after handling.

BARK BLOWER SAFETY SUMMARY SECTION

It is important that all operators of this machine are familiar with all the safety aspects mentioned below before operating the machine. Always keep a copy of this manual with the machine. It is the responsibility of the operator of the machine to fully understand this safety section. Remember that YOU are the key to safety. Good safety practices protect not only you but also the people working with and around you. Keep in mind that this safety sheet is written for this type of machine only. Practice all other usual and customary safe working precautions; and above all, remember that safety is up to you.

I. PRE-START EQUIPMENT CHECK (equipment check is to be made with the engine off):

1. Check hitch and hitch bolts, safety chains, lights, brakes and breakaway switch. Verify that the hitch ball or pintle hook is the correct size for the coupler.

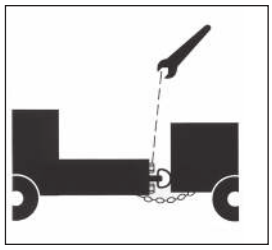

2. Verify that all guards are in place.
3. By carefully looking into the blower hopper and transition, inspect for and remove any foreign objects. Follow OSHA lockout/tagout procedure (29 CFR 1910.147)
4. Inspect all hydraulic hoses and tubes for cracks, bulges or damage. If hose is bad, replace immediately.
5. Inspect the material discharge hose and connections for cracks or damage. If damage is found, replace affected part immediately.

II. MACHINE OPERATION:

1. Always wear safety goggles when operating or feeding the machine. Other safety attire such as safety shoes, ear protection, gloves, hard hats, dust masks, etc., should be worn as required by warning decals on machine, operator's manuals, or job requirements. Remove rings, watches, etc. Avoid loose fitting clothing which may get caught in rotating machinery.

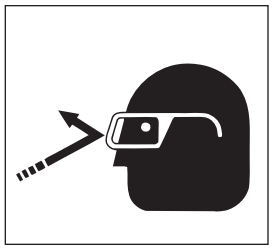

2. Do not override or tamper with the safety shutdown switches on the folding door or discharge. If switches fail, use OSHA lockout/tagout procedure (29 CFR 1910.147) until switches are repaired or replaced.
3. Do not operate the machine without all guards in place.

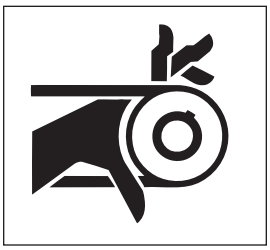

4. Never attempt to connect or disconnect the discharge hose while the engine is running.
5. Make sure that no one is working in or on the machine. Make sure the discharge area is clear of all persons, animals, etc. Signal "All Clear" before starting the engine. Keep unauthorized personnel away from the machine and discharge hose at all times.
6. The driver of the towing vehicle is responsible for the safety of the operator(s) and feeder(s) of the machine. Make sure the driver is aware of and avoids all possible hazards, such as tree limbs, low power lines, etc.

7. Do not allow anyone to ride on the trailer or any other part of the blower for any reason.
8. Never operate machine in an enclosed area without venting the exhaust of both the equipment and the tow vehicle. Deadly carbon monoxide fumes can accumulate.

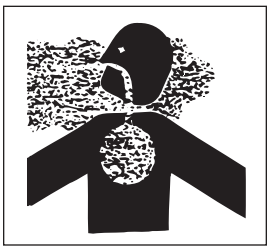

9. Never operate this or any other machinery when fatigued, tired, under the influence of alcohol, illegal drugs or medication. You must be in good physical condition and mentally alert to operate this machine.

10. Never modify the machine. Never remove any part of the machine (except for service and then reinstall before operating).

11. During application, high pressure can be exerted at the end of the hose. Always establish and maintain good footing and hold the hose firmly. Extra personnel may be required to help direct and hold the hose, especially when working on slopes. The proper technique for hose holding personnel is to firmly grasp the hose under both arms. Never hold the hose so it goes between the legs.

12. The blower discharges material at pressures and velocities that can cause severe bodily injury. Do not aim discharge at people, animals, etc. Only aim the discharge at the intended discharge area. Unless properly protected, do not place hand into the discharge stream.

13. Do not open any doors or access panels while machine is in operation. Severe injury may result from rotating parts.

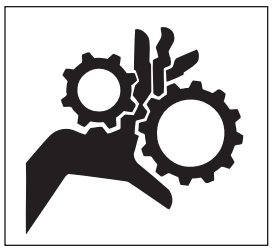

14. Do not attempt to pull anything out of the blower hopper when machine is in operation. Shut down the engine, using OSHA lockout/tagout procedure (29 CFR 1910.147) before removing any foreign objects. Signal "All Clear" before restarting the machine.

15. When leaving the blower unattended for any reason, be sure to:

    A. Shut off conveyor drive.

    B. Shut off vehicle engine and blower engine.

    C. Place transmission of the vehicle in "neutral" or "park".

    D. Set parking brake firmly.

    E. Lock ignition and take keys with you.

    F. Lock vehicle cab.

    G. If on a steep grade, block the wheels.

    These actions are recommended to avoid unauthorized use, runaway, vandalism, theft and unexpected operation when the equipment is restarted.

16. Do not read, eat or otherwise lose or lessen your attention in any manner while operating the blower. Operating is a full time job.

17. Be careful in getting on and off the blower, especially in wet, icy, snowy or muddy conditions. Clean mud, snow or ice from steps, fenders and footwear.

18. All personnel operating and/or around the machine must be aware that the blower can be controlled via remote control. For safety reasons and to prevent accidental starting, always keep the power switch on the remote receiver in the "OFF" position when the remote control is not being used.

20. Turn slowly and travel on rough surfaces and side slopes carefully, especially with a loaded blower body.

III. MAINTENANCE:

1. Before servicing the machine, turn off engine and allow all moving parts to stop. Disconnect the battery cables to prevent accidental starting of the machine. Tag the engine operating area to show that the machine is being serviced. Use lockout/tagout procedure (29 CFR 1910.147).

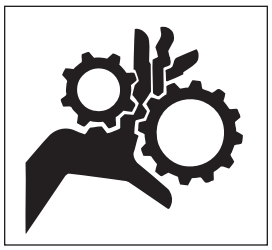

2. Take extreme care when adjusting or replacing knives. Knife edge is very sharp and can cause severe bodily injury.

3. Radiator maintenance. Liquid cooling systems build up pressure as the engine gets hot. Before removing the radiator cap, stop the engine and let the system cool. Remove the radiator cap only after the coolant is cool.

4. Battery maintenance. Lead-acid batteries contain sulfuric acid which may damage eyes or skin on contact. Always wear a face shield to avoid acid in the eyes. If acid contacts eyes, flush immediately with clean water and get medical attention. Wear rubber gloves and protective clothing to keep acid off skin. Lead-acid batteries produce flammable and explosive gasses. Keep arcs, sparks, flames, and lighted tobacco away.

5. Filling of fuel. Never fill the fuel tank with the engine running, or while smoking or when near an open flame. Never smoke while handling fuel or working on the fuel system. The fumes in an empty container are explosive. Never cut or weld on fuel lines, tanks, or containers. Move at least 10 feet (3 meters) away from fueling point before starting engine. Wipe off any spilled fuel and let dry before starting engine.

   NOTE: Be careful not to allow fuel, lubricant, hydraulic fluid, or cooling fluids to penetrate into the ground or be discharged into the water system. Collect all used fluids and dispose of them properly.

6. It is recommended that only authorized genuine FINN replacement parts be used on this machine.

7. Do not use ether cold start fluid if engine is equipped with glow plug type preheater or other intake manifold type preheater. It could cause an explosion or fire and severe injury or death.

8. Diesel fuel or hydraulic fluid under pressure can penetrate the skin or eyes and cause injury, blindness or death. To check for such leaks, use a piece of cardboard or wood instead of your hand. Pressure may build up in the hydraulic system so use caution when removing the cap.

9. Some parts and assemblies are quite heavy. Before attempting to unfasten any heavy part or assembly, arrange to support it by means of a hoist, by blocking or by use of an adequate arrangement to prevent it from falling, tipping, swinging or moving in any manner which may damage it or injure someone.

10. If repairs require use of a torch or electric welder, be sure that all flammable and combustible materials are removed. Fuel or oil reservoirs must be emptied, steam cleaned and filled with clean water before any cutting or welding on them is attempted. Do NOT weld or cut on any tank containing oil, gasoline or their fumes or other flammable material, or any container whose contents or previous contents are unknown.

CURRENT SET OF SAFETY DECALS

CAUTION Wear proper eye protection when feeding this machine.
22690

WARNING
BURN HAZARD!
Hot exhaust!
Stay back!
Failure to comply could result in death or serious injury.
P/N 12278

DANGER
SEVER HAZARD!
Keep hands and feet out!
Sharp knives will sever.
Failure to comply will result in death or serious injury.
P/N 55219

WARNING
Turn engine off, disconnect battery, and allow all moving parts to stop before servicing equipment.
P/N-22357

DANGER
Rotating Parts.
Turn off engine and allow all parts to stop completely before opening door, removing guards or attempting service.
20066

WARNING
BREAKAWAY SWITCH
Do not use for parking. Attach cable to towing vehicle with slack for turning. Engine battery on trailer must be charged and hooked up for proper breakaway function.
P/N-23423

WARNING
CONTENTS UNDER HIGH PRESSURE!
To prevent injury or death:
- Turn off engine to relieve air pressure on system before uncoupling any hoses or loosening any clamps.
- Wear proper eye and hand protection when operating equipment.
- Keep all hoses, couplings and clamps in good condition.

Failure to comply could result in death or serious injury.
P/N 55735

CAUTION
Wear hearing protection when operating on or around this equipment.
P/N 23857

CAUTION
Both the single and double chains must be crossed under the tongue. They must be oriented in such a manner as to prevent the tongue from dropping to the ground in the event of failure to the hitch, coupler or ball. The Chains must be connected to the towing vehicle so that the slack for each length of chain, between the trailer and the towing vehicle, is the same and must have no more slack when in use than is necessary to permit proper turning of the vehicles. The forward end of the chain must be attached to the towing vehicle, not to the ball, but to the hitch or other frame member. The chain must be looped around the member and hooked back into itself.
SAFETY CHAIN INSTALLATION
P/N-31228

WARNING
FLYING OBJECTS!
STAY BACK!
Stay away from discharge area during operation. Keep bystanders away.
DO NOT point discharge toward people, animals or property.
ALWAYS wear appropriate protective gear.
Failure to comply could result in death or serious injury.
P/N 55280

WARNING
Do not operate without guards in place.
P/N-12179

CAUTION
Always inspect tow vehicle and equipment hitch before towing. Tighten all hitch bolts and properly connect wiring and saftey chains.
P/N-31227

OPERATION AND MAINTENANCE OF THE FINN MODEL BB-200 BARK BLOWER

THE FINN BB-200 BARK BLOWER AND ITS FUNCTION:

The FINN Model BB-200 Bark Blower is an apparatus for conveying and discharging bulk materials, such as bark mulch, at a fast and uniform rate utilizing a minimum amount of manpower. The product to be used is generally composted and processed and used as a soil amendment, a ground cover for erosion and weed control, or for decorative purposes on landscaping (bark mulch).

This manual is intended to provide step-by-step instructions on the operation, care, and maintenance of the Bark Blower. In addition, it contains illustrations and a complete list of parts and components for easy identification.

HOW THE BARK BLOWER WORKS:

The bulk material is loaded into the hopper. Located at the bottom of the hopper are two feed rolls. The feed rolls feed the bulk material into a rotary air valve. The rotary air valve is specifically designed and built to handle tough, fibrous material. The function of the rotary air valve is to take the bulk material into open pockets exposed to the outside air and to convey it to an area where the pocket is closed off. At that point a high-pressure air stream, created by the blower, is channeled through the pocket carrying the material off and through the hose for discharge.

IMPORTANT: For best results and to insure safe operation and long life of the equipment, please read and follow all instructions carefully.

TOWING VEHICLE:

The truck used to tow the FINN Model BB-200 Bark Blower must be equipped with the appropriate ball or pintle type hitch. This hitch should be mounted as near to the end of the truck bed as possible. The tow vehicle should be fully wired for trailer marker, turn, and stop lights as well as electric brakes.

SELECTING A MULCHING MATERIAL:

Several factors must be considered when selecting material to convey through the Bark Blower. The variety of the wood used, how it is processed, its moisture content, and the presence of foreign objects all effect the ability of the Bark Blower to convey the mulch at a uniform and acceptable rate.

The mulch material must be processed and/or screened so that a minimum of material is over 2 inches (5.1 cm) in any direction with no material exceeding 3 inches (7.62 cm) in length. The Bark Blower is not a wood processor. It only reduces mulch fibers when they protrude above the rotary air valve vanes. As the vanes rotate past the knife, the protruding fibers are sheared off. If the mulch contains long or large fibers, and if the wood fibers are harder to cut, then the machine's throughput is reduced. For example, if two mulches have the same mix of material sizes that the Bark Blower rotor must cut, but one is softwood like pine, and one is hardwood such as oak, the pine would go through at a higher rate because it is easier to cut.

Two characteristics must be considered when selecting a material: the "greenness" of the wood and the moisture of the mulch as a whole. Wood that is well seasoned is easier to cut then "green" wood. It also processes better, making a less stringy mulch. High moisture in the mulch may cause it to bridge in the hopper.

Avoid using mulches that contain any hard foreign objects such as rocks, nails, steel, cans, glass, etc. These objects could cause bodily injury as well as damage to machine components, especially the cutting knife in the rotary air valve.

PRE-START EQUIPMENT CHECK:

CAUTION: Equipment check is made with the engine off and all rotating parts stopped.

SAFETY CHECK TO INSURE OPERATOR SAFETY:

1. Check all trailer connections to the towing vehicle, as well as the condition of the safety chains, and bolts connecting the ball coupler or pintle eye to the tongue.
2. Insure that all guards are in place.
3. Tool Kit - see that it contains all prescribed items (see tool kit list, page 43).
4. Lubrication Equipment - use hand gun only (see lube chart, pages 18-19).
5. Check engine oil - refer to engine operator's manual.
6. Check fuel level. Check engine oil level . . . for oil type refer to the engine manual.
7. Inspect the engine air cleaner (refer to the engine operator's manual) and the blower air cleaner for dust and dirt.
9. Check hopper and transition for foreign objects that could injure workers, or damage equipment.
10. Check the fluid level in the hydraulic tank. Proper level is when the sight gauge is full to the upper black line when unit is sitting on level ground. (See "Subsection 2: Hydraulic System" page 9 for oil specification).
11. Install the discharge hose. Use clamps provided with the machine.

CAUTION: **Do not use radiator type clamps. These clamps may not hold under machine operating pressure.**

STARTING PROCEDURE:

CAUTION: **See safety section of the manual (pages 2-5) before operating the machine.**

1. Set throttle about 1/4 open.
2. Pull Choke Control out.
3. Turn the key clockwise until the starter catches and engine fires.
4. Push the Choke Control in for even running.
5. Verify that the "DOOR SWITCH" light is illuminated. If not, verify that the door is closed at the rotary air valve.
6. Allow the engine to warm up for three to five minutes.
7. Prior to mulch application, move the throttle position to fully open, and allow the governor to control the engine speed. Governed engine speed on the FINN Bark Blower should be 3300 to 3600 RPM under load.

CREW MEMBERS AND THEIR DUTIES:

1. The Operator controls the placement of the mulch by moving and aiming the discharge hose.
2. The Loader(s) feed material to the machine by shoveling from the tow vehicle to the hopper.

THE MATERIAL FEED SYSTEM:

The material feed system on the Bark Blower has been designed to give fast, uniform, mechanical feeding. The adjustable feeding rate and the automatic reverse control system allow the use of varied materials while obtaining maximum production. The system is an integration of the following three subsystems, all of which contribute to efficient material flow:

SUBSYSTEM 1: MATERIAL HANDLING GROUP

The three major components of the material handling group are the Blower, the Feed Rolls, and the Rotary Air Valve.

The Blower is a rotary lobe, positive displacement type unit having two double lobe impellers. It is driven off the engine by a drive belt; therefore whenever the engine is running, air is being pumped. The blower is equipped with an inlet and outlet silencer for noise attenuation, and an inlet air filter.

The Feed Rolls receive material from the hopper and meters it to the Rotary Air Valve. They insure a uniform feed of bulk material to the Rotary Air Valve, and are powered by a variable speed hydraulic motor connected together by a chain drive.

The Rotary Air Valve receives the material from the Feed Rolls and pressurized air from the Blower. Its primary function is to convey the material from the atmospheric air to a sealed chamber where the Blower air picks it up and blows it out of the hose. To enable the Bark Blower to convey fibrous material, the rotary air valve housing is equipped with a cutting knife, and the vanes on the rotor are angled and hardened. If any long material should protrude above a vane, it will be sheared off, before the vane enters the close tolerance of the housing, by a scissor like action between the vane and cutting knife. The rotor of the Rotary Air Valve is direct coupled and driven by a bi-rotational hydraulic motor.

SUBSYSTEM 2: HYDRAULIC SYSTEM

Hydraulic power for the Bark Blower is generated by a fixed displacement hydraulic pump driven off of the engine. The pump receives AW46 hydraulic fluid from the 5 gallon (19 liter) reservoir through a suction hose, and delivers it to the solenoid control valves. Pressure driving the two hydraulic circuits can be monitored on the gauges provided.

A. ROTARY AIR VALVE

The pump feeds oil to the rotary air valve motor through a solenoid valve. The solenoid valve is an open center spool valve with built in relief set at 2100 psi (14500 kPa). The spool in the valve is spring centered, and is moved by actuating a 12V DC solenoid on either end of the spool. Spool movement can be checked manually by pushing the button located at either end. Energizing a solenoid produces high-pressure oil at the work port away from that solenoid. Thus, energizing the top solenoid on the valve channels oil from the pump to the bottom work port on the valve. This is “forward” position on the rotary air valve motor. Energizing the bottom solenoid produces “reverse” rotation on the rotary air valve motor.

B. FEED ROLLS

Oil leaving the rotary air valve circuit feeds to the feed roll motor through a “dump” valve system. The feed roll speed control valve, located on the top of the valve mounting plate is actually three valves in one manifold; a relief valve set at 1850 psi (12800 kPa) to protect this circuit, a 12 VDC normally open solenoid “dump” valve, and a flow control valve.

Oil entering this manifold flows back to the tank. Energizing the solenoid valve forces oil through the flow control valve where a certain amount flows to the feed roll hydraulic motor causing the roll to rotate. Turning the adjustment knob on top of the valve increases or decreases the amount of oil going to the feed roll motor, and thus the speed. The two feed rolls are connected by a chain drive. Before entering the feed roll drive motor, the oil passes through a manual reversing valve. If the rolls become stalled, pushing the knob on this valve towards the hopper will cause the rolls to reverse. The rolls will return to forward rotation as soon as the valve knob is released. Please note that this valve will only operate if the electric control system for the valve is "ON".

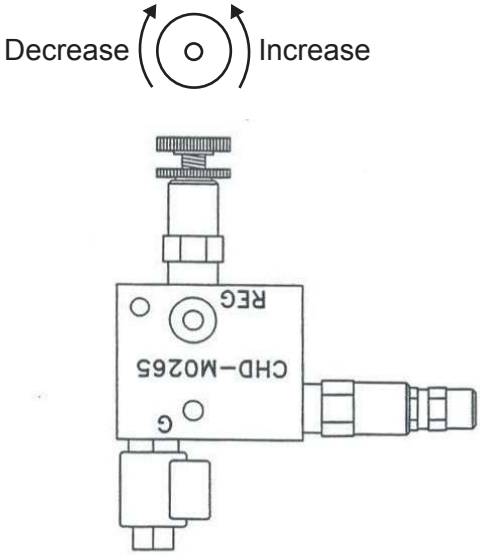

Black Cartridge with 1" (25mm) Diameter Knob:
Turn Counter-Clockwise to Increase Speed.
Turn Clockwise to Decrease Speed.

Figure 1 - Flow Control Valve

SUBSYSTEM 3: HYDRAULIC CONTROL SYSTEM

The hydraulic control system is an electrical system that controls the on-off function of the feed roll motor and the rotation direction of the rotary air valve motor. This 12-volt DC system runs off the engine electrical system. It is a series of relays, located in the control box that controls the solenoid valves in the hydraulic system.

When the material hopper switch is placed in the "ON" position (provided the door switch light is illuminsted), power is sent through the TR1 timer to activate the "forward" solenoid on the rotary air valve circuit. Power is also sent to the TD1 relay. After TD1 times out, power is sent to the feed roll valve. As material drops into the top of the rotary air valve, the pressure to turn the rotary air valve varies. If the pressure reaches the relief valve setting in the solenoid control valve, the oil is channeled through the relief to the hydraulic tank. Placed in the forward work line is a normally open pressure switch. When the pressure in the work line exceeds the pressure switch setting, the switch then closes and activates timer TR1.

TR1 automatically reverses the rotary air valve for the set time on the timer (approximately 1 second). While in reverse, it also cuts power to the feed rolls, shutting them off. At the end of TR1's set time, power is restored to the "forward" solenoid putting the rotary air valve back into forward. Power is also restored to the time delay TD1.

TD1 is the time delay for the feed rolls. This delay keeps material from feeding into the rotary air valve until the set time (approximately 1.5 seconds) has passed coming out of auto-reverse. In the case of multiple auto-reverses, it keeps the transition area above the rotary air valve clear of any new material.

When the material hopper switch is placed in the "OFF" position, power is cut to the relays. This stops the hydraulic motor on the feed rolls and the rotary air valve by shutting off power to the solenoids. Shutting off the ignition key can also stop the hydraulics. Please note that the hydraulics will also stop if the transition door, between the feed rolls and the rotary air valve, is opened and cannot be restarted unless the door is closed.

MULCHING WITH THE BARK BLOWER:

1. Check all areas listed under “Pre-Start Equipment Check” (pages 7).
2. Start the engine following all the steps listed under “Starting Procedure” (page 8).
3. Set the floor speed control to ½ to 1 turn from minimum.
4. Increase the throttle to full.
5. With a firm grip on the end of the hose, place the material hopper switch in the “on” position.
6. Adjust the feed roll speed for smooth flow. Watch for auto-reversing of the air lock as well as shock waves through the hose.
7. At the end of the load, switch the material hopper switch to "off" and shut down engine.

NOTE: Laboring of the engine indicates excessive feed roll speed.

TROUBLE SHOOTING CHART:

Symptom	Probable Cause	Remedy
No material discharge.	Feed Rolls not turning.	Turn material hopper switch on. Reset speed control. Momentarily reverse feed rolls.
	Electrical control system off.	Check door light/switch.
	Reverse interval too long.	Reset time (1 sec.) on TR1.
	Feed roll jammed.	Clear jam, reset speed control.
Air valve auto-reverses excessively.	Feed rate too high.	Slow speed control.
	Dull air valve knife.	Sharpen and reset knife.
	Poor material.	Change material.
	TD1 time set too low.	Reset timer (1.5 sec.)
Air valve motor stalls in reverse, cycling forward-reverse.	Over-feeding.	Slow speed control.
	Foreign object in transition or hose outlet.	Shut-off engine and remove object.

TROUBLE SHOOTING CHART CONT'D:

Symptom	Probable Cause	Remedy
Air valve motor stalls in forward, no auto reverse.	Reverse time interval too short. (TR1)	Reset timer (1 sec.)
	Knives dulled or chipped: Knife clearance too large.	Sharpen blades, reset knife clearance.
	Relief pressure on solenoid valve is set too low.	Reset to 2100 psi.
Feed roll stops.	Speed control set too low.	Reset speed control ½-1 turns from minimum.
	Foreign object in material.	Stop engine-remove object.
	Relief too low on roll.	Reset relief to 1850 psi.

ELECTRONIC TIMER RANGE PROGRAMING INSTRUCTIONS

The following instructions present all of the necessary steps to program the Electronic Timer. Turn selectors securely with use of a flat screwdriver (4mm maximum wide blade). Note that an incomplete setting may cause a malfunction. Be careful to not turn the selectors beyond their limits. Since changing a setting during timer operation may cause a malfunction, always turn off the power before changing any settings.

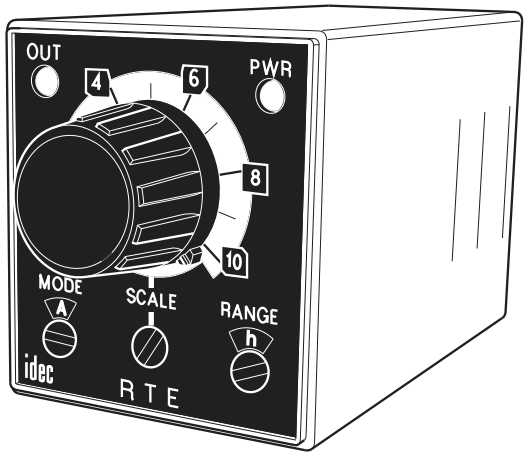

Figure 2 - Electronic Timer

SELECT MODE OF OPERATION

Select the operation mode by turning the selector with use of a flat screwdriver (4mm wide maximum) until the appropriate node designation appears in the window directly above the selector. See Figure 3.

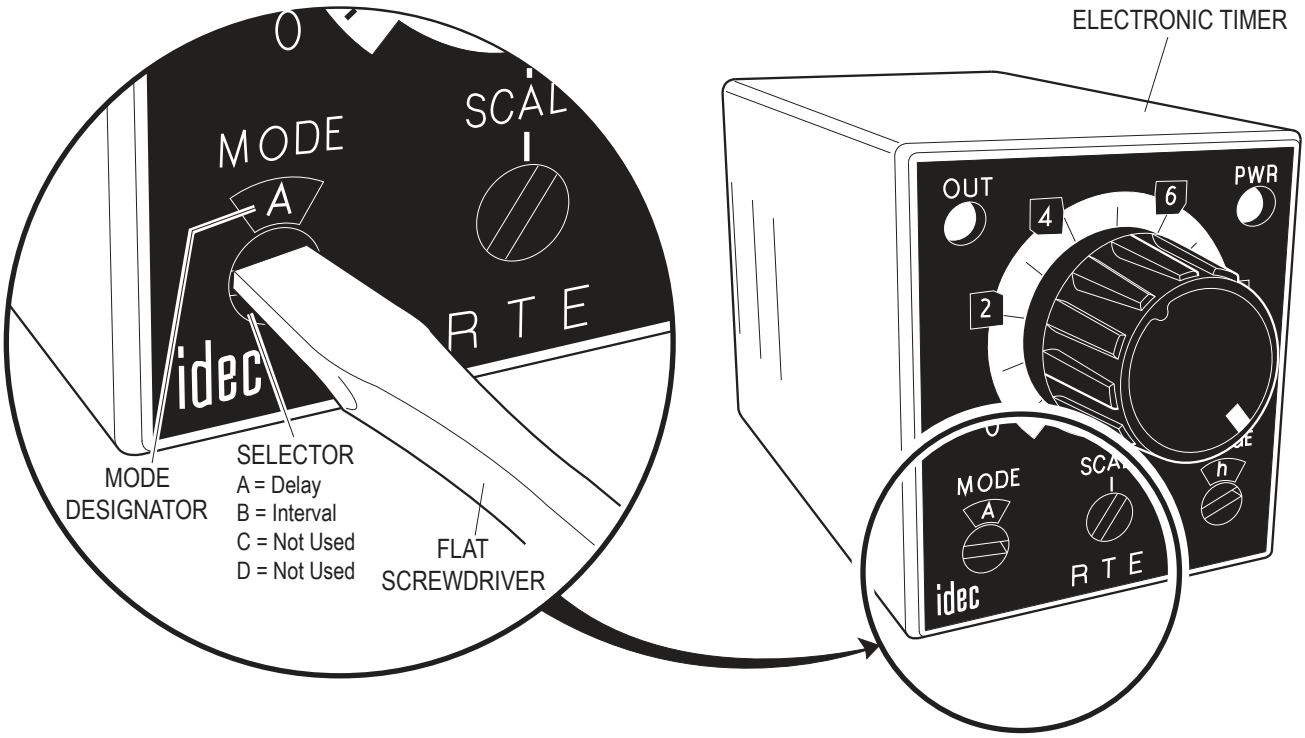

Figure 3 - Set Mode of Operation

SELECT THE TIME RANGE

Select the time range by turning the scale selector until the appropriate dial settings appear on the timer faceplate. Refer to Figure 4.

Next, turn the range selector until the appropriate range designator appears in the window directly above the selector. Refer to Figure 5.

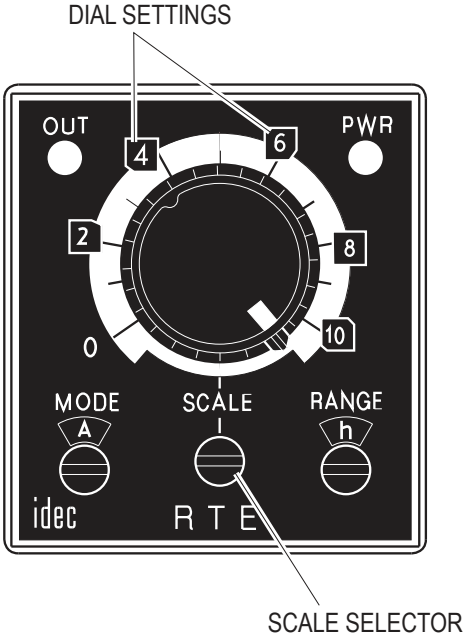

Figure 4 - Scale Setting

Range Designator	DIAL SETTINGS				
	0-1	0-3	0-10	0-30	0-60
S	0.1 Sec. - 1 Sec.	0.1 Sec. - 3 Sec.	0.2 Sec. - 10 Sec.	0.6 Sec. - 30 Sec.	1.2 Sec. - 60 Sec.
min	1.2 Sec. - 1 Min.	3.6 Sec. - 30 Min.	12 Sec. - 10 Min.	3.6 Sec. - 30 Min.	1.2 Min - 60 Min.
h	1.2 Min. - 1 Hr.	3.6 Min. - 3 Hr.	12 Min. - 10 Hr.	3.6 Min. - 30 Hr.	1.2 Hr. - 60 Hr.
10h	12 Min. - 10 Hr.	36 Min. - 30 Hr..	2 Hr. - 100 Hr.	6 Hr. - 30 Hr.	12 Hr. - 600 Hr.

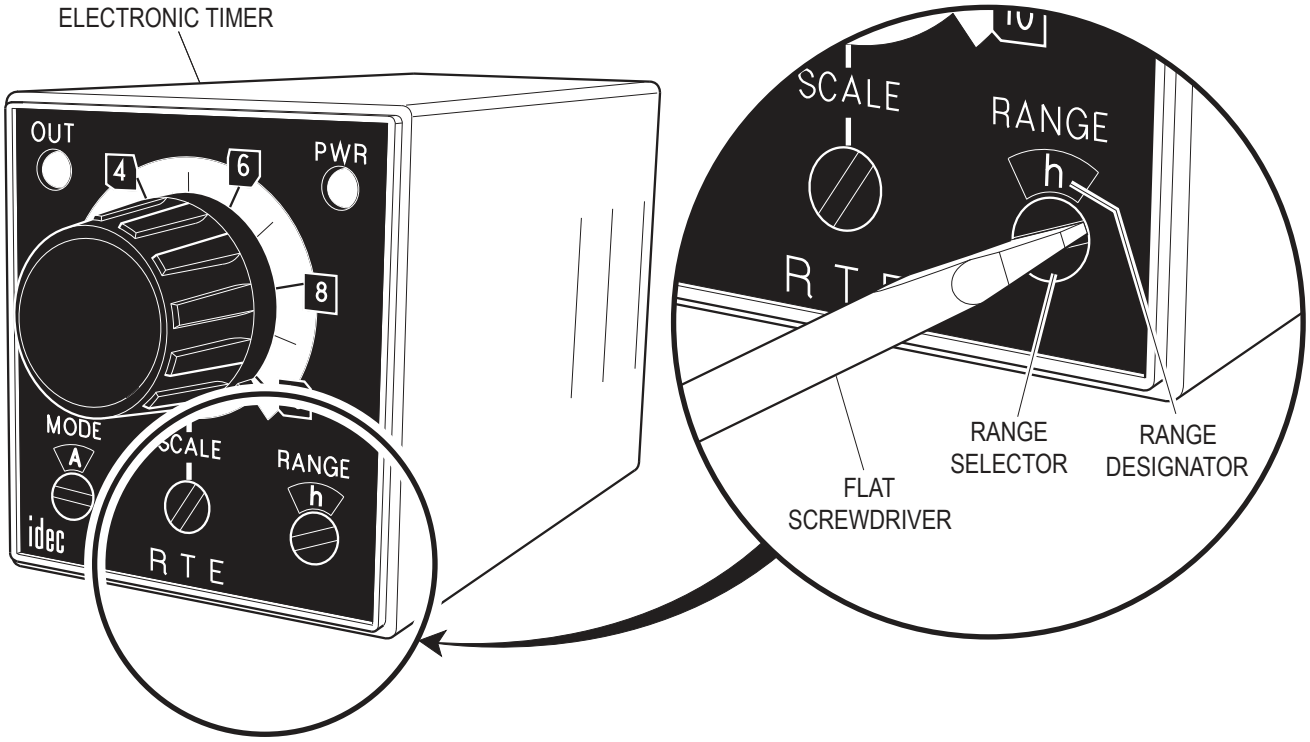

Figure 5 - Set Range

NOTE: Refer to Page 40 for the Engine and Control Box Wiring Diagram and specific factory settings for the Electronic Timer.

CLEANING AND MAINTENANCE:

CAUTION: **Turn off engine and disconnect battery before servicing equipment.**

AFTER FIRST 4-8 HOURS OF OPERATION:

1. Check and adjust belt. Proper tension is obtained when 5/8" (1.6 cm) of belt deflection is obtained at the center of the belt span when a force of 8 lbs (3.6 kg) for a used belt to 10 lbs (4.5 kg) for a new belt is applied.

2. Retorque wheel lugs 85-98 ft. lbs. (12-13 kg-m) after 7 days. (Trailer option only).
3. Change the engine oil and filter.

CAUTION: Adjust only while the engine is off.

WEEKLY - AFTER EVERY 50 HOURS OF OPERATION:

1. Lubricate the bearings on the blower and on each end of the feed roll shaft. Wipe each bearing before lubrication to remove dirt and prevent overheating.
2. Remove and clean air cleaner elements on the engine and blower using dry, clean compressed air.
3. Check the oil in the rotary air valve gearbox.
4. Check the gear case on the blower (see Lube Chart on pages 18 and 19).
5. Check rotary air valve knife for wear, chips, and clearance. To change:

DANGER: Knives have very sharp edges that can cause serious injury. Handle with care.

a) Remove five bolts holding knife and transition door to rotary air valve knife shelf.

b) Remove door and knife.

c) Clean all dirt or debris from shelf.

d) Back out the two center jacking screws on the shelf.

e) Compare replacement knife to the one removed. If the new knife is wider, back the two outside jacking screws out at least this amount. Count the turns, and back both screws out evenly.

f) Lay the knife on the knife shelf. Insure the knife is installed with the cutting angle edge facing down as shown in Figure 6. Install loosely the two outer, and the middle knife mounting bolts. Tighten the mounting bolts just enough to hold the knife in position while still allowing it to be moved.

g) Install a block of wood (approximately 2” x 4” x 6” long (5x10x15 cm)) in between the knife and the closest vane at the center of the rotor length. Pinch the wood between the knife and the vane by turning the rotor shaft with a pipe wrench.

h) While keeping pressure on the knife, tighten the three mounting bolts.

i) Remove the wood block, and check the clearance between the knife and the rotor vane using a feeler gauge at the three mounting bolts.

NOTE: If the knife touches the vane at any point, loosen the three mounting bolts, back off the jacking screws evenly, and repeat steps g, h, and i until clearance is obtained.

j) Loosen the three mounting bolts, and use the jacking screws to close the gap. One full turn of the screw moves the knife 0.070 inches (1.8 mm).

k) Tighten mounting bolts as in step g and h.

l) Repeat steps, g, h, i, and j until a knife to vane clearance of no more than 0.006 inches (0.15 mm) is obtained at the closest point(s).

m) Once set, install the other two mounting bolts and tighten.

n) Run two center jacking screws in to contact the knife. Lock all jacking screws in place with the jam nuts.

o) Remove three mounting bolts for transition door, and install the door.

p) Immediately have removed knife sharpened. Do not attempt to grind the knife by hand. They must be ground straight and true on a surface grinder by an experienced knife sharpener. Grind the knife to the profile shown below in Figure 6.

Figure 6 - Knife Profile

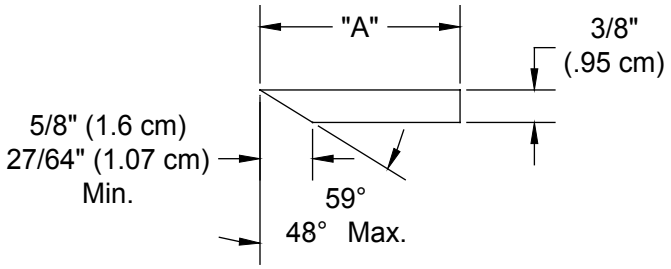

When dimension “A” has been reduced to 2- 3/8 inches (6 cm) the knife must be discarded.

AFTER FIRST 100 HOURS OF OPERATION:

1. Change engine oil and filter after 100 hours, every 250 hours after that following engine manufacturer’s recommendations.
2. Change the gear box oil on the blower, use Mobil SHC 630 synthetic oil only. Change oil every 1000 hours thereafter.
3. Change the gearbox oil on the rotary air valve using SAE 80W90 oil, filling to the side plug. Change every 1000 hours thereafter.

EVERY 3 MONTHS OR 3000 MILES (4800 KM):

1. Check and adjust trailer brakes.
2. Re-torque wheel lug nuts (85-95 ft.lbs. (12-13 kg-m)).
3. Check tire condition.

EVERY 12 MONTHS OR 12000 MILES (19300 KM):

1. Inspect and repack wheel bearings.
2. Inspect trailer brake magnets, pads, drums, etc.

WINTER SHUTDOWN AND STORAGE:

1. Blow all material out of machine, turn off engine and disconnect battery cables.
2. Remove air filter, reducer and silencer to the blower air chamber and coat internals of impeller cylinder with a rust preventative such as “WD-40”. Reconnect piping to prevent foreign debris from entering blower chamber. Rotate drive shaft three or four revolutions. Repeat this process every month or as conditions may require.
3. Store machine inside or protect as best as possible.

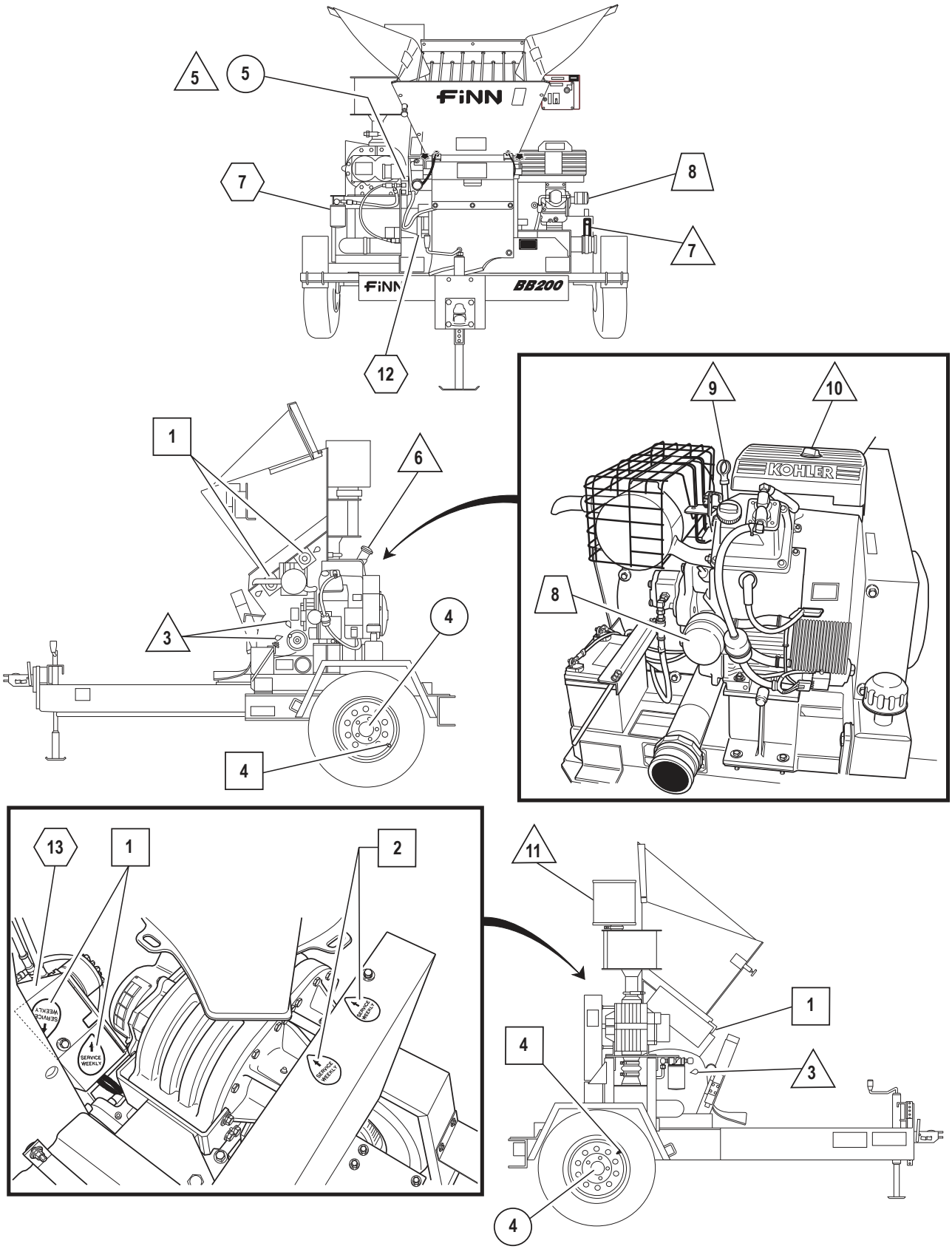
5
5
FiNN
7
8
7
FiNN
BB200
12
9
10
KOHLER
1
6
8
3
4
4
13
1
2
SERVICE WEEKLY
SERVICE WEEKLY
SERVICE WEEKLY
SERVICE WEEKLY
11
1
4
3
4

LUBRICATION CHART

Ref. No.	Location	Lubricant	Frequency	Number
1	Feed Roll Bearing (Idle & Drive)	CL	Weekly	5
2	Blower Bearings	CL	Weekly	2
3	Airlock Bearing	CL	Daily	3
4	Tire Air Pressure		Weekly	2
	Wheel Bearings	CL	Annually	2
5	Check Oil Level - Blower	BO	Daily	1
	Change Oil - Blower	BO	Annually	1
6	Check Fuel Level	FU	Daily	1
7	Check Hydraulic Oil Level	HO	Daily	1
	Change Hydraulic Oil & Filter	HO	Seasonally	1
8	Change Engine Oil & Filter	MO	*See Engine Manual*	1
9	Check Engine Oil Level	MO	Daily	1
10	Check Air Cleaner - Engine		Daily	1
11	Check Air Cleaner - Blower		Daily	1
12	Gearbox - Airlock	GO	Seasonally	1
13	Feed Roll Chain Drive	CL	Seasonally	1

LUBRICANT OR FLUID USED

CL	Chassis Lubricant
MO	Motor Oil SAE 10W-40
AF	50/50 Anti-Freeze and Water
FU	Gasoline
HO	Hydraulic Oil, ISO Grade 46
GO	90 W Gear Oil
BO	Mobile SHC 630 Synthetic Oil

TIME KEY

Daily (8 hours)

Weekly (40 hours)

Seasonally (500 hours)

Annually (2,000 hours)

See Engine Manual

FLUID CAPACITIES

Fuel - 5.5 Gallons (20.81 Liters)
Hydraulic Oil - 5 Gallons (18.92 Liters)
Engine Oil - 2.1 Quarts (1.98 Liters)
Gearbox Oil - 9 Ounces (0.26 Liters)
Blower Oil - 18.3 Ounces (0.54 Liters)

NOTES

BARK BLOWER

Model BB-200
Parts Manual

Model SE

NOTES

FINN BB-200 BARK BLOWER

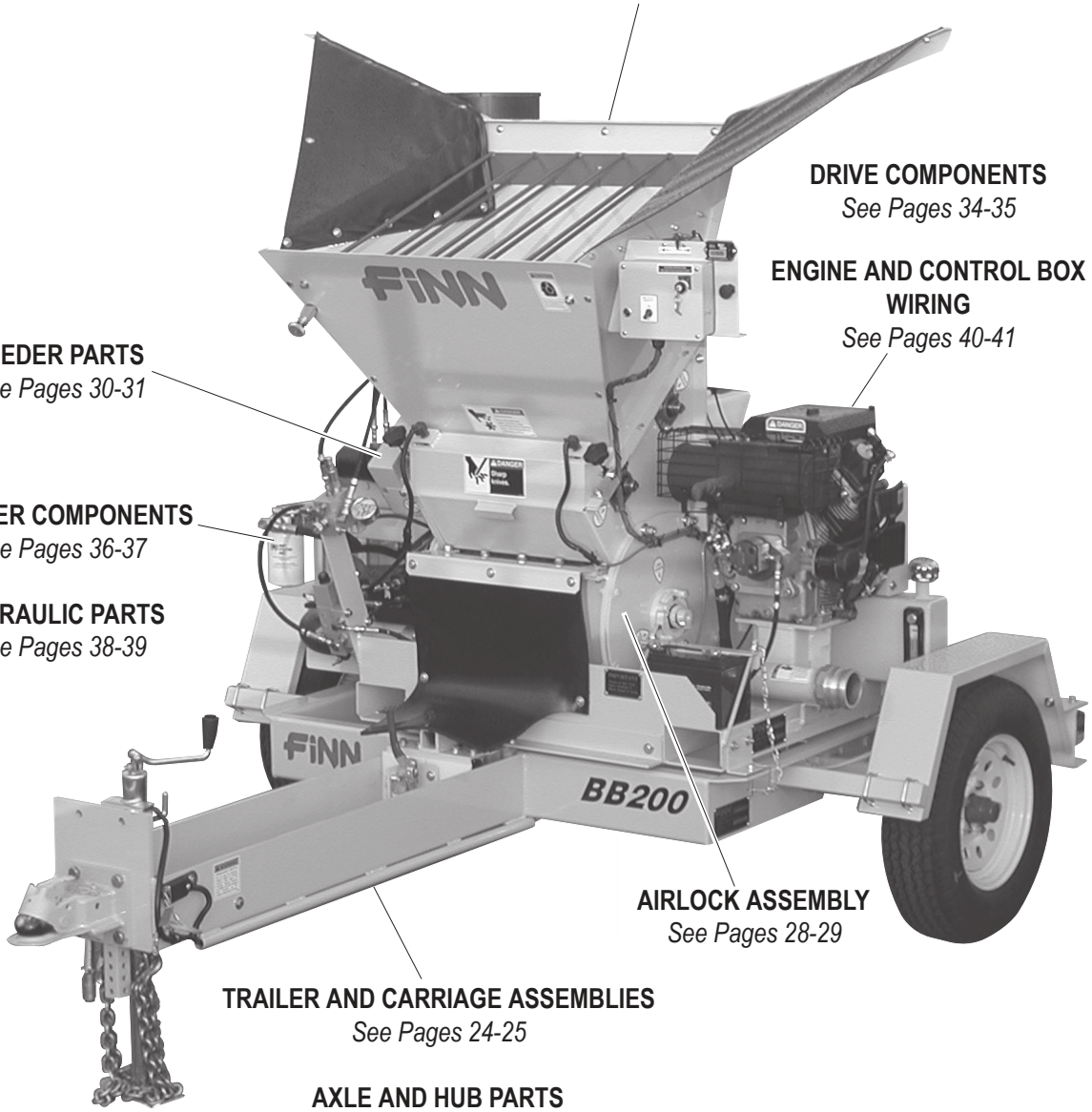

HOPPER
See Pages 32-33

DRIVE COMPONENTS
See Pages 34-35

ENGINE AND CONTROL BOX WIRING
See Pages 40-41

FEEDER PARTS
See Pages 30-31

BLOWER COMPONENTS
See Pages 36-37

HYDRAULIC PARTS
See Pages 38-39

AIRLOCK ASSEMBLY
See Pages 28-29

TRAILER AND CARRIAGE ASSEMBLIES
See Pages 24-25

AXLE AND HUB PARTS
See Page 26

BRAKE PARTS
See Page 27

TRAILER WIRING
See Page 42

TOOL KIT, DISCHARGE HOSE AND RECOMMENDED SPARE PARTS	*See Page 43*
DECAL AND PLATE LOCATIONS	*See Pages 44-45*

WHEN ORDERING PARTS, BE SURE TO STATE SERIAL NUMBER OF MACHINE

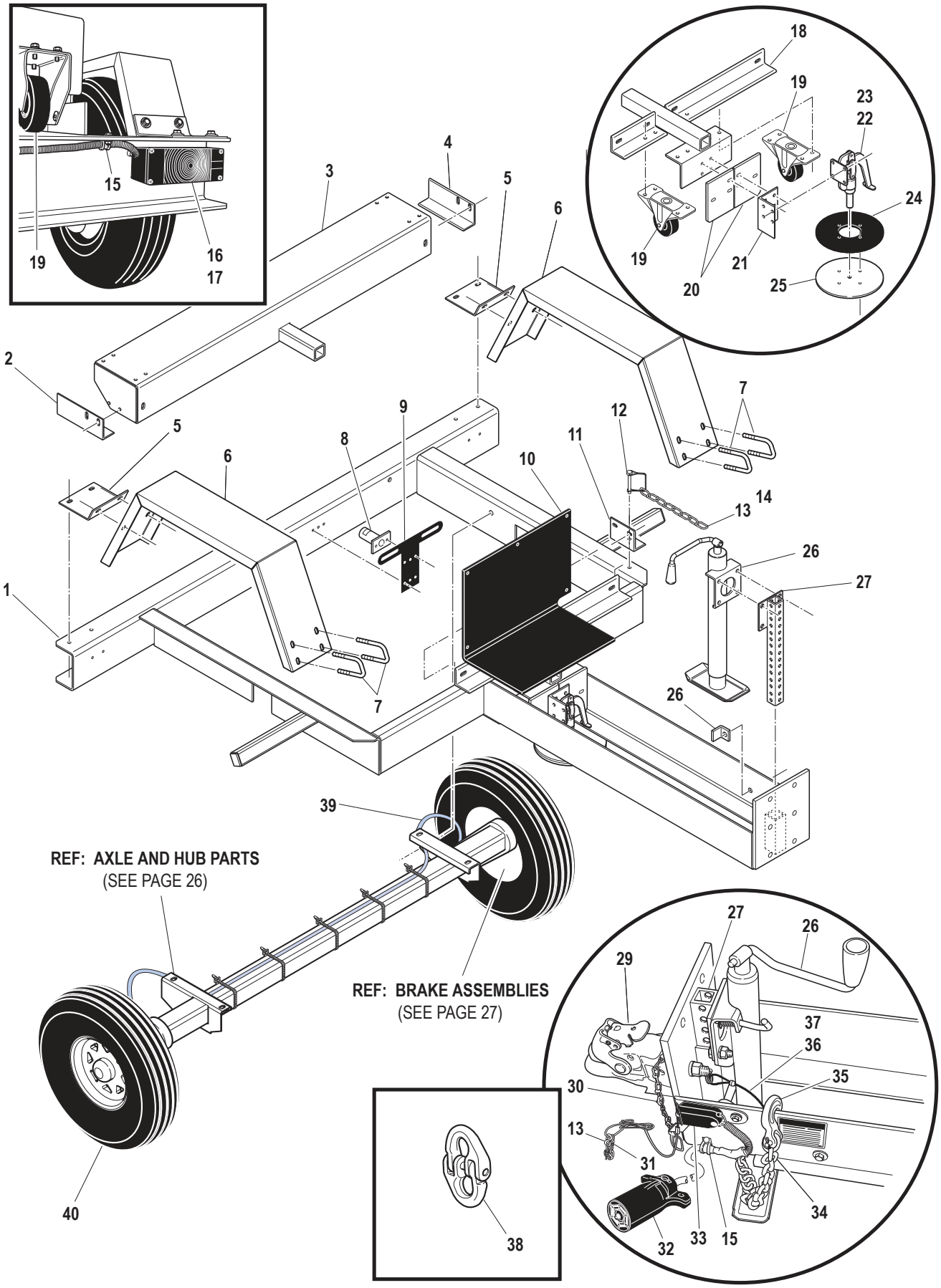

WHEN ORDERING PARTS, BE SURE TO STATE SERIAL NUMBER OF MACHINE

TRAILER AND CARRIAGE ASSEMBLIES

Ref. No.	Part Number	Description	No. Req'd
1	340030	Trailer Weldment	1
2	340034-02	Carriage Clamp - LH	1
3	340035	Rear Carriage Weldment	1
4	340034-01	Carriage Clamp - RH	1
5	F201-0008	Rear Fender Mount	2
6	F201-0007	Fender	2
7	005545	Square U-Bolt	4
8	005436	License Light	1
9	004720	License Plate Bracket	1
10	340034-17	Mud Flap	1
11	340034-14	Trailer Lock Angle	1
12	FW71225	Snapper Pin	1
13	190029	Chain (12 Links)	16"
14	005016	S-Hook	2
15	060281	Loop Clamp	11
16	005137	Taillight, Left	1
17	005138	Taillight, Right	1
18	340034	Front Carriage Weldment	1
19	340015	Rigid Caster	4
20	340034-12	Scrapper Blade	2
21	340034-08	Brake Mount	1
22	340053	Carriage Locking Clamp	1
23	340066	Collars and Couplings	1
24	340034-16	Brake Pad	1
25	F201-0040	Brake Clamping Disk	1
26	031189	Top Wind Swivel Jack	1
27	340031	Jack Slide Weldment	1
28	340034-15	Stop Angle	1
29	031202	Hitch Coupler	1
30	190029	Chain (13 Links)	18"
31	005017	Snap Hook	1
32	075592	7-Blade Trailer Plug	1
33	023424	Breakaway Switch	1
34	190028	Binder Chain	6'
35	031180	Clevis Grab Hook	2
36	005700	Nylon Lanyard	1
37	005695	Cotterless Hitch Pin	1
38	031181	Coupling Link	2
39	340071-01	Brake Wiring Harness	1
40	055737	13" Tire Assembly	2

WHEN ORDERING PARTS, BE SURE TO STATE SERIAL NUMBER OF MACHINE

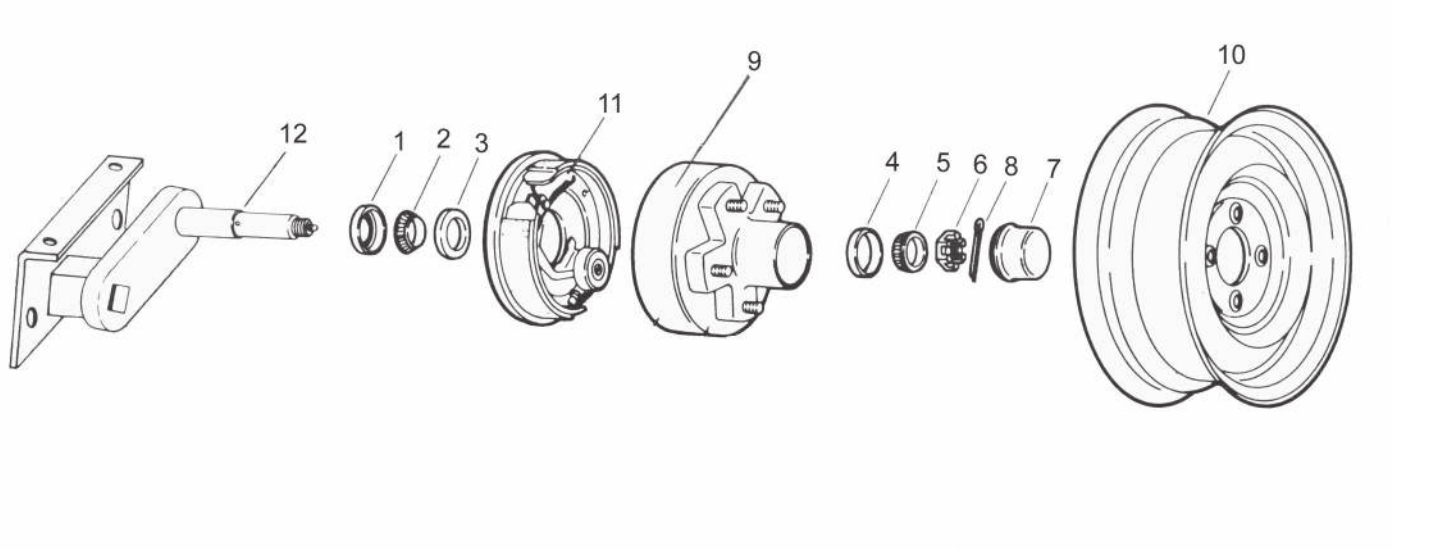

AXLE & HUB PARTS

Ref. No.	Part Number	Description	No. Req'd
	055736	Axle Assembly	2
1	WL10-9	Grease Seal	1
2	WL31-31-2	Inner Bearing Cone	1
3	WL31-31-1	Inner Bearing Cup	1
4	WL31-31-1	Outer Bearing Cup	1
5	WL31-31-2	Outer Bearing Cone	1
6	WL6-1	Spindle Nut	1
7	WL21-3	Grease Cap	1
8	WL19-2	Cotter Pin	1
9	WL8-247-5	Hub & Drum	1
	WL25-53	½ - 20 Stud	5
10	055737	Rim & Tire Assembly	1
	055737-R	Rim	1
	055737-T	Tire	1
11	WL23-26	Left-Hand Brake Assembly (See Page 27)	1
	WL23-27	Right-Hand Brake Assembly (See Page 27)	1
12		Standard Axle Beam	

WHEN ORDERING PARTS, BE SURE TO STATE SERIAL NUMBER OF MACHINE

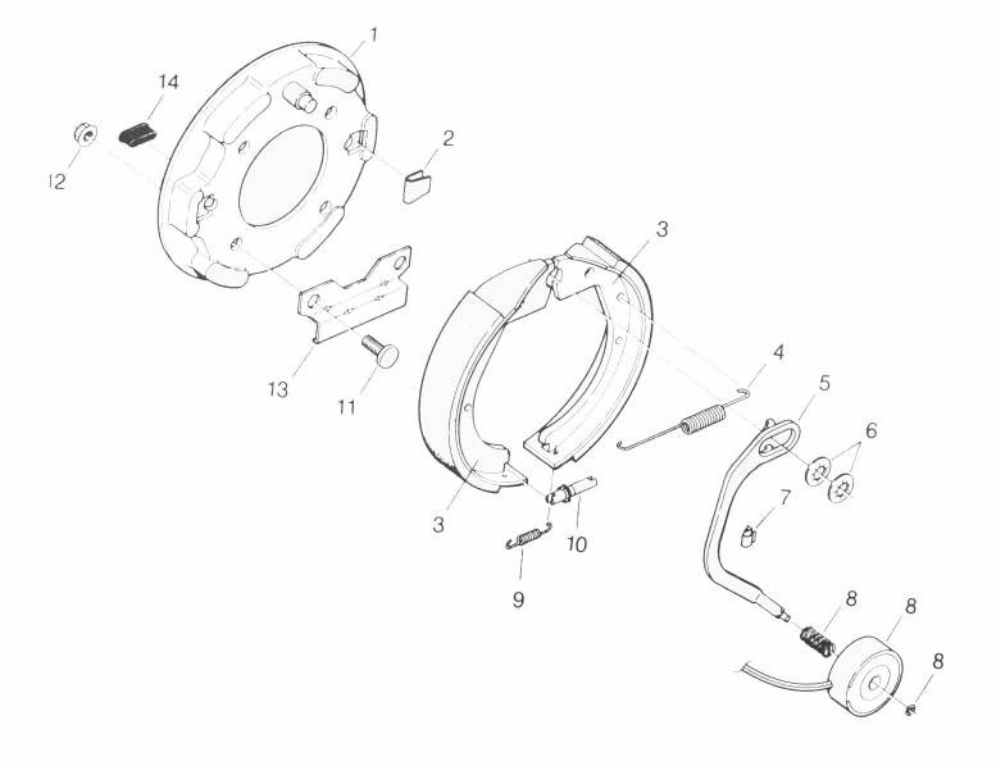

BRAKE ASSEMBLIES

Ref. No.	Part Number	Description	No. Req'd
	WL23-26	Left-Hand Brake Assembly	1
	WL23-27	Right-Hand Brake Assembly	1
1	WL36-19-10	Backing Plate Assembly	1
2	WL47-19	Left-Hand Actuating Lever Arm	1
	WL47-20	Right-Hand Actuating Lever Arm	1
3	WL05-067	Washer	1
4	WL27-5	Wire Clip	3
5	WL46-9	Retractor Spring	2
6	WL71-47	Shoe & Linkage Kit:	1
	WL40-17	Secondary S & L	1
	WL40-21	Primary S & L	1
7	WL43-4	Adjuster Assembly	1
8	WL46-18	Adjusting Screw Spring	1
9	WL71-104	Magnet Kit:	1
	WL27-9	Magnet Clip	1
	WL42-97-1	Magnet	1
	WL46-80	Magnet Spring	1
10	WL46-7	Plug	1
11	WL46-16	Wire Grommet	1
12	WL7-41	Brake Mounting Bolt	4
13	WL6-17	Brake Mounting Nut	4

WHEN ORDERING PARTS, BE SURE TO STATE SERIAL NUMBER OF MACHINE

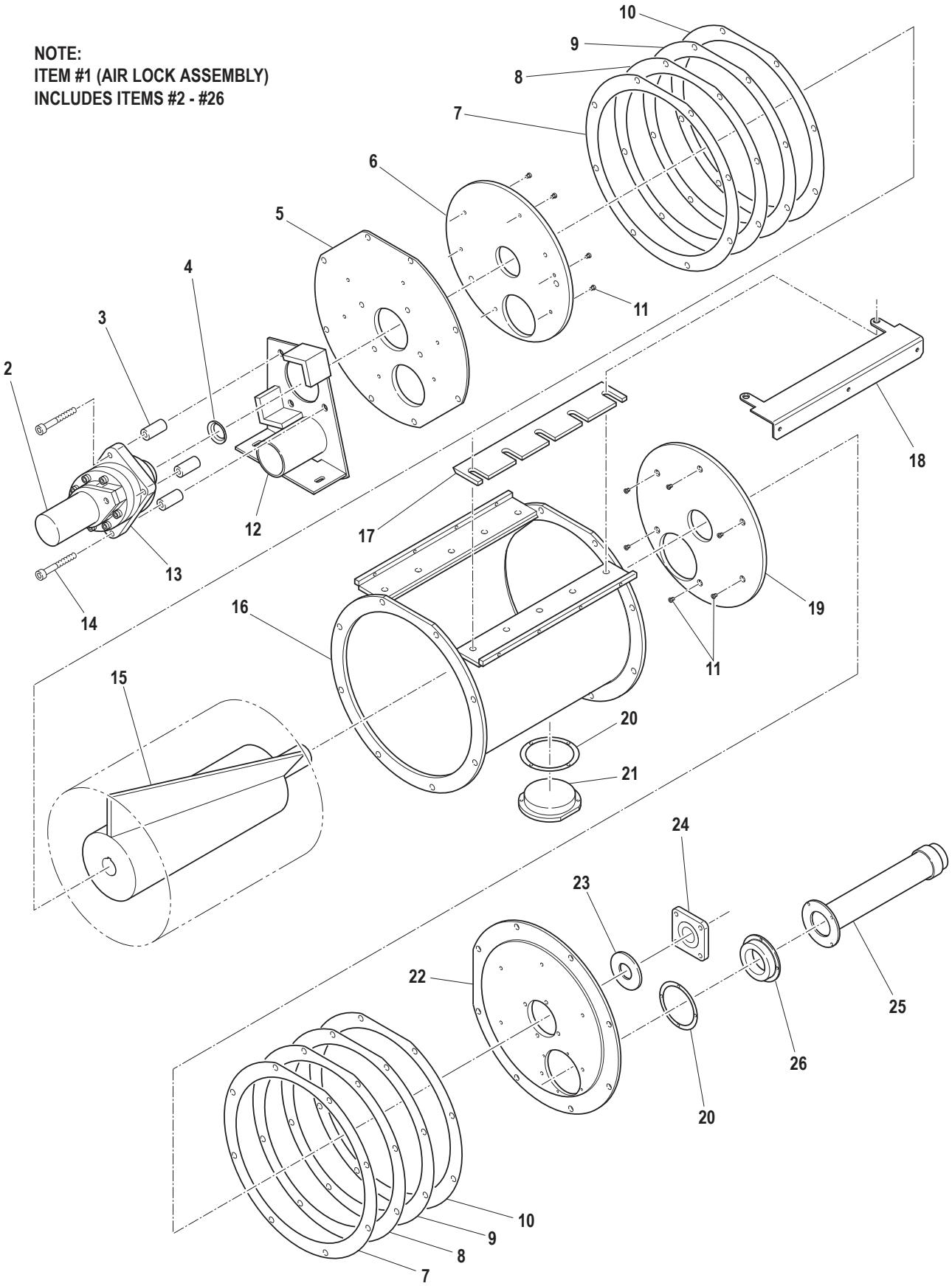

WHEN ORDERING PARTS, BE SURE TO STATE SERIAL NUMBER OF MACHINE

AIRLOCK ASSEMBLY

Ref. No.	Part Number	Description	No. Req'd
1	340060	BB200 Airlock Assembly	1
2	055552	Hydraulic Motor	1
3	052139-03	Gearbox Spacer	4
4	055700	Excluder Slinger Seal	1
5	055439-02	Inlet End Plate	1
6	055721	Inlet Seal End Plate	1
7	055148-01	Rotor Housing Shim - 1/32" Thick	A/R
8	055148-02	Rotor Housing Shim - 1/16" Thick	A/R
9	055148-03	Rotor Housing Shim - 1/64" Thick	A/R
10	055148-04	Rotor Housing Shim - 0.006" Thick	A/R
11	055694	3/8-16 x 3/4" Lg Low Hd Socket Cap Screw	12
12	055580	Inlet Flange Weldment	1
13	055464	Gearbox	1
14	X0860SH	1/2-13 X 3-3/4" Lg Shoulder Bolt	4
15	055423	Rotor	1
16	055644	Airlock Housing	1
17	055113	Chipper Grade Knife	1
18	F201-0043	Screw Cover Guard	1
19	340074	Outlet End Seal Plate	1
20	055440	Insert Gasket	A/R
21	055722	Discharge Insert	1
22	340059	Airlock End Plate	1
23	F302-0003-01	Airlock Seal Washer	1
24	055701	1-1/2" Flanged Bearing	1
25	340052	Discharge Tube Weldment	1
26	340023	Air Lock Insert	1

WHEN ORDERING PARTS, BE SURE TO STATE SERIAL NUMBER OF MACHINE

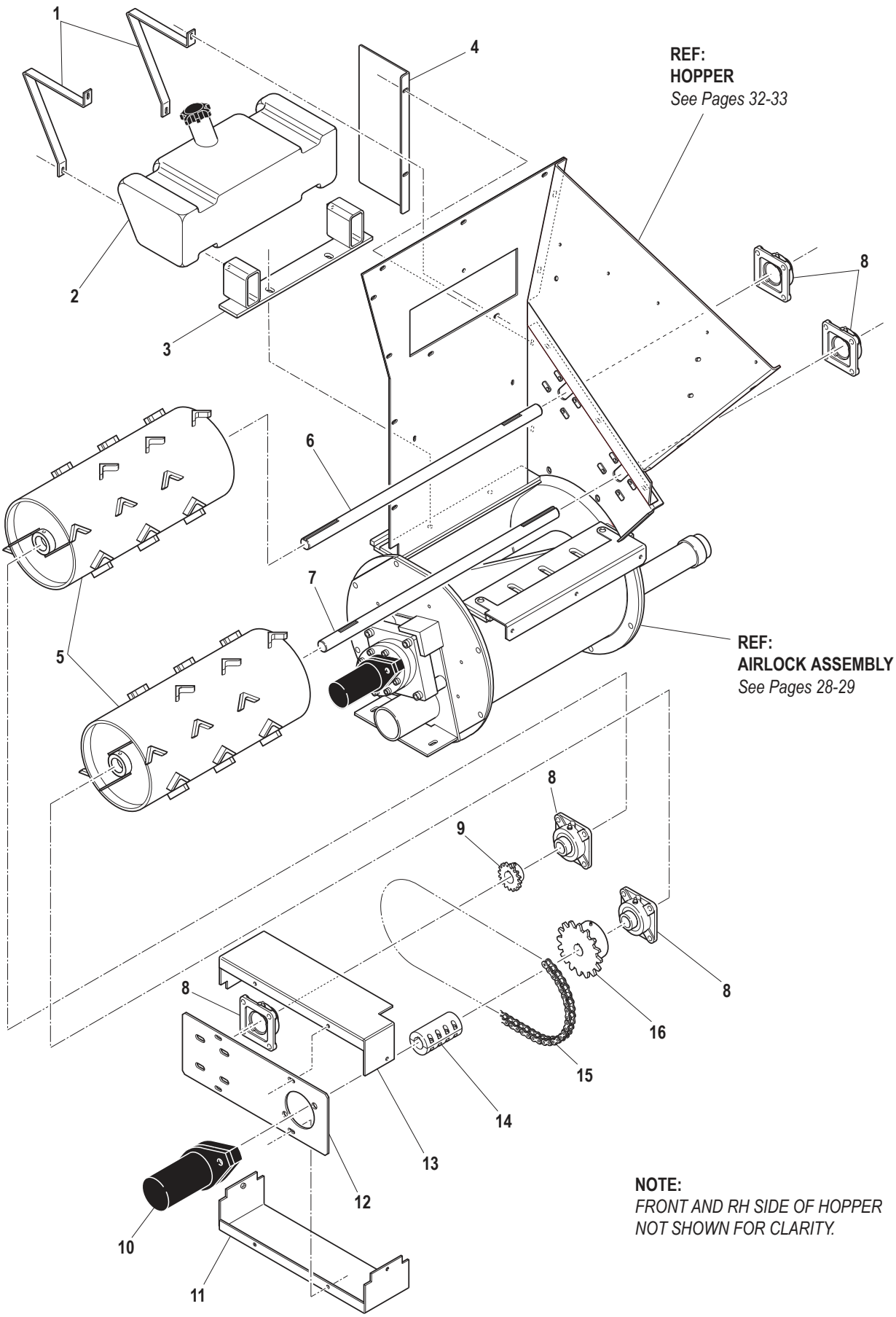

WHEN ORDERING PARTS, BE SURE TO STATE SERIAL NUMBER OF MACHINE

FEEDER PARTS

Ref. No.	Part Number	Description	No. Req'd
1	F201-0022	Mount Strap	2
2	035123	Plastic Fuel Tank	1
3	340033	Fuel Tank Mount Weldment	1
4	F201-0046	Fuel Tank Shield	1
5	340036	Feed Wheel Weldment	2
6	340026-01	Driven Shaft	1
7	340026-02	Drive Shaft	1
8	340024	Bearing	5
9	340020	Sprocket	1
10	080482	Hydraulic Motor	1
11	F201-0035	Lower Chain Guard	1
12	F201-0034	Torque Arrestor Plate	1
13	F201-0037	Upper Chain Guard	1
14	340016	Coupling	1
15	340022	Roller Chain	1
16	340021	Sprocket	1

WHEN ORDERING PARTS, BE SURE TO STATE SERIAL NUMBER OF MACHINE

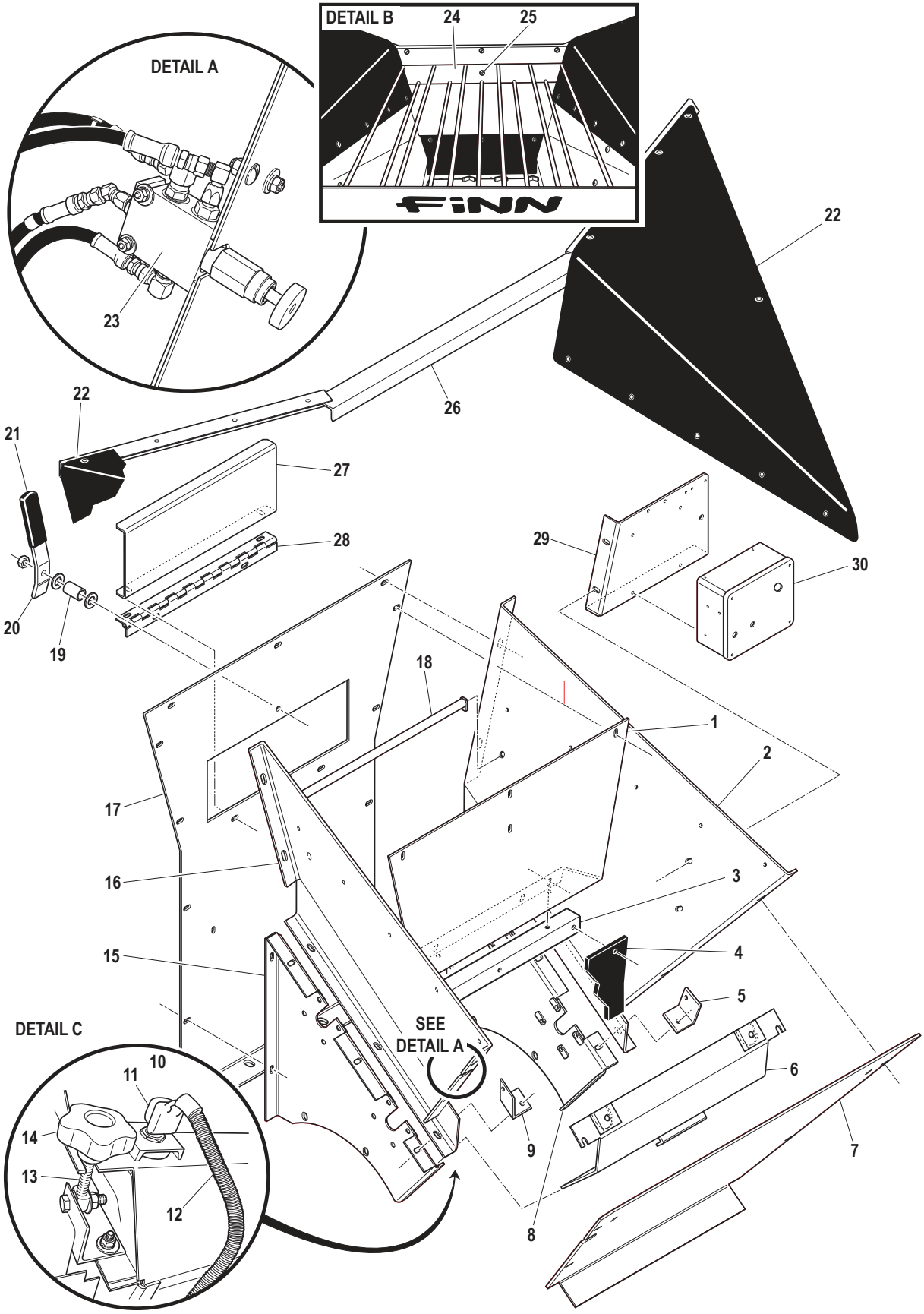

WHEN ORDERING PARTS, BE SURE TO STATE SERIAL NUMBER OF MACHINE

HOPPER

Ref. No.	Part Number	Description	No. Req'd
1	F201-0030	Wedge	1
2	F201-0028	Hopper Top Side - L.H.	1
3	340029-08	Rubber Mounting Angle	1
4	340029-12	Hopper Flap	1
5	340029-10	Swing Bolt Mount - L.H. Side	1
6	340050	Front Door Weldment	1
7	F201-0029	Hopper Front	1
8	F201-0026	Roll Side - L.H.	1
9	340029-09	Swing Bolt Mount - R.H. Side	1
10	052707	Hex Nut	2
11	052436	Switch	2
12	340065	BB200 Controls Wiring Harness	1
13	052703	3/8-16 x 2-1/2" Lg. Swing Bolt	2
14	052699	3/8-16 Fluted Black Knob	2
15	F201-0025	Roll Side - R.H.	1
16	F201-0027	Hopper Top Side - R.H.	1
17	F201-0024	Hopper Back	1
18	340029-11	Hopper Cross Pipe	1
19	340029-13	Handle Spacer	1
20	023572-09	Door Latch	1
21	022202	Handle Grip	1
22	075443	Vinyl Side	2
23	340027	Valve	1
24	340073	Safety Grate Weldment	1
25	340080	Security Screw	3
26	340072	Wing Mount Weldment	1
27	F201-0031	Rear Door	1
28	340029-07	Hinge	1
29	F201-0033	Control Box Mount	1
30	340051	Control Box	1

WHEN ORDERING PARTS, BE SURE TO STATE SERIAL NUMBER OF MACHINE

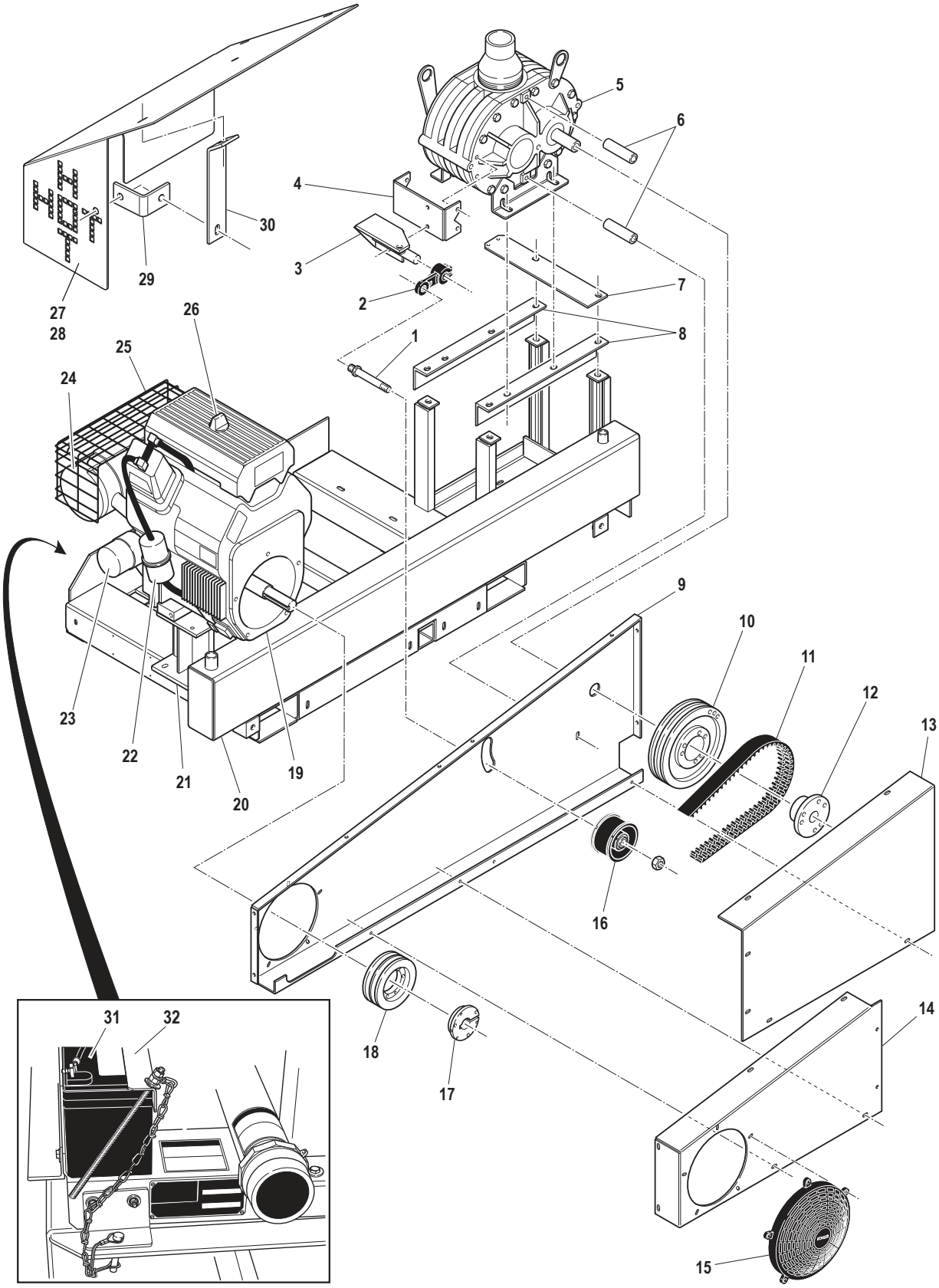

WHEN ORDERING PARTS, BE SURE TO STATE SERIAL NUMBER OF MACHINE

DRIVE COMPONENTS

Ref. No.	Part Number	Description	No. Req'd
1	340017	Belt Tensioner Stud	1
2	055486	Shaft Tensioner	1
3	340057	Belt Tensioner Mount	1
4	340058	Belt Tensioner Base	1
5	055706	Blower	1
6	340029-05	Belt Guard Spacer	2
7	340029-04	Hydraulic Filter Mount	1
8	340029-01	Blower Mounting Angle	2
9	F201-0011	Front Belt Guard	1
10	340007	Blower Sheave	1
11	340004	Power Band	1
12	340008	Blower Sheave Bushing	1
13	F201-0012	Blower Outer Belt Guard	1
14	F201-0013	Engine Outer Belt Guard	1
15	KL2475581-S	Fan Guard	1
16	340018	Idler Pulley	1
17	340006	Engine Sheave Bushing	1
18	340005	Engine Sheave	1
19	071007	Engine	1
20	340028	Frame Weldment	1
21	340032	Engine Mount Weldment	1
22	KL2405002	Fuel Line Filter	1
23	KL1205001	Oil Filter	1
24	KL2406817	Muffler	1
25	KL2475580	Muffler Guard Kit	1
26	KL2488303-S1	Air Cleaner Element	1
27	F201-0047	Engine Cover	1
28	340090	Insulation Blanket	1
29	340029-16	Engine Cover Mounting Angle	1
30	F201-0045	Engine Cover Mounting Bracket	1
31	035127	Battery	1
32	031368	Battery Holddown Strap	1

WHEN ORDERING PARTS, BE SURE TO STATE SERIAL NUMBER OF MACHINE

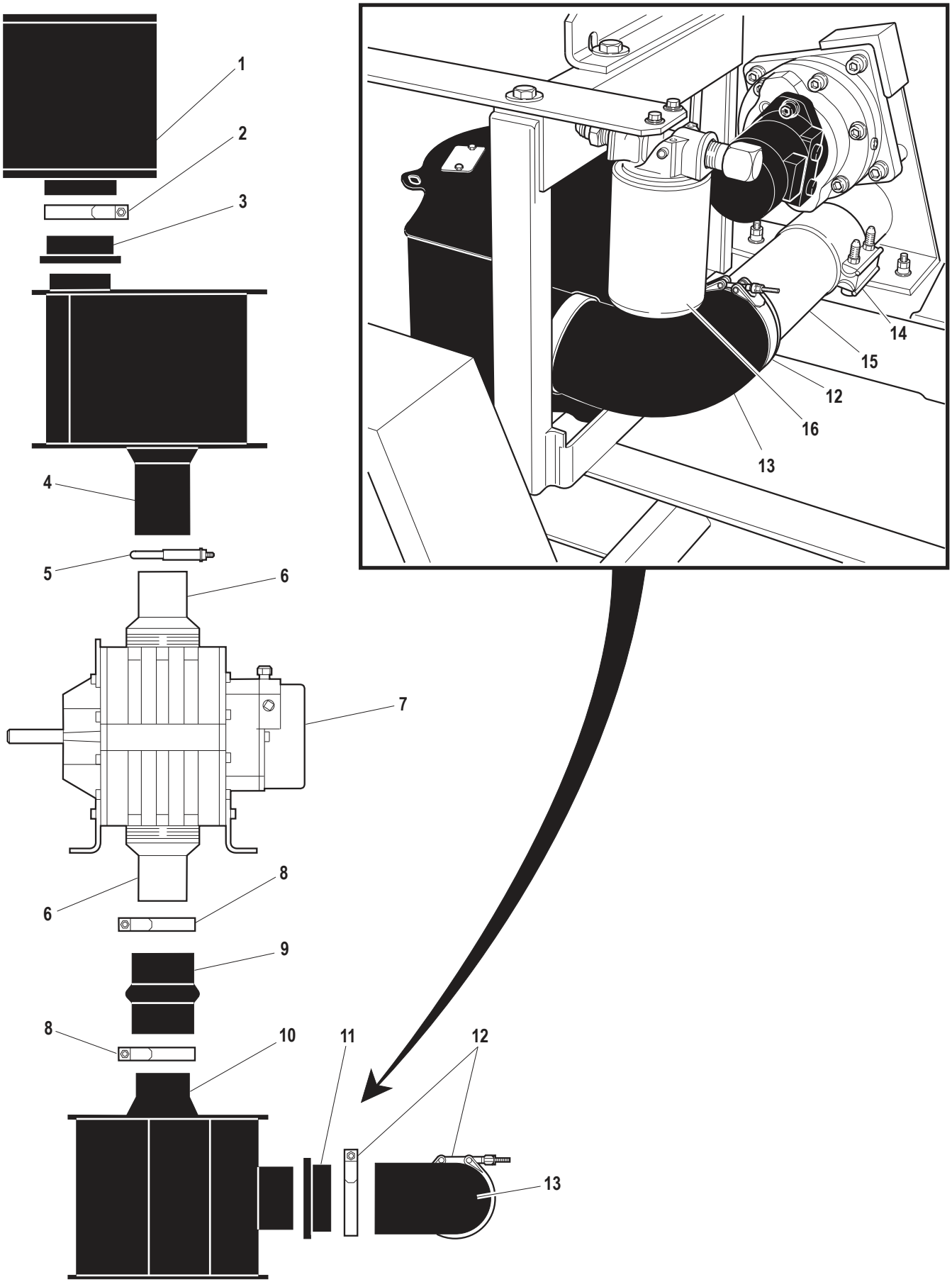

WHEN ORDERING PARTS, BE SURE TO STATE SERIAL NUMBER OF MACHINE

BLOWER COMPONENTS

Ref. No.	Part Number	Description	No. Req'd
1	340011	Air Filter	1
2	055335	4" Clamp	1
3	075245	4" x 3" Reducer	1
4	340037	Cowl Silencer	1
5	055501	Muffler Clamp	1
6	055584-06	Blower Filter Adapter	2
7	055706	Blower	1
8	055496	3" Clamp	2
9	340014	Hump Reducer	1
10	340002	Cowl Silencer	1
11	340013	Insert Sleeve	1
12	055497	3-1/2" Clamp	2
13	340012	90 Degree Rubber Elbow	1
14	340010	Butt Joint Clamp	1
15	340029-03	Airlock Extension Pipe	1
16	021617	Return Filter	1
	021618	Filter Element	1

WHEN ORDERING PARTS, BE SURE TO STATE SERIAL NUMBER OF MACHINE

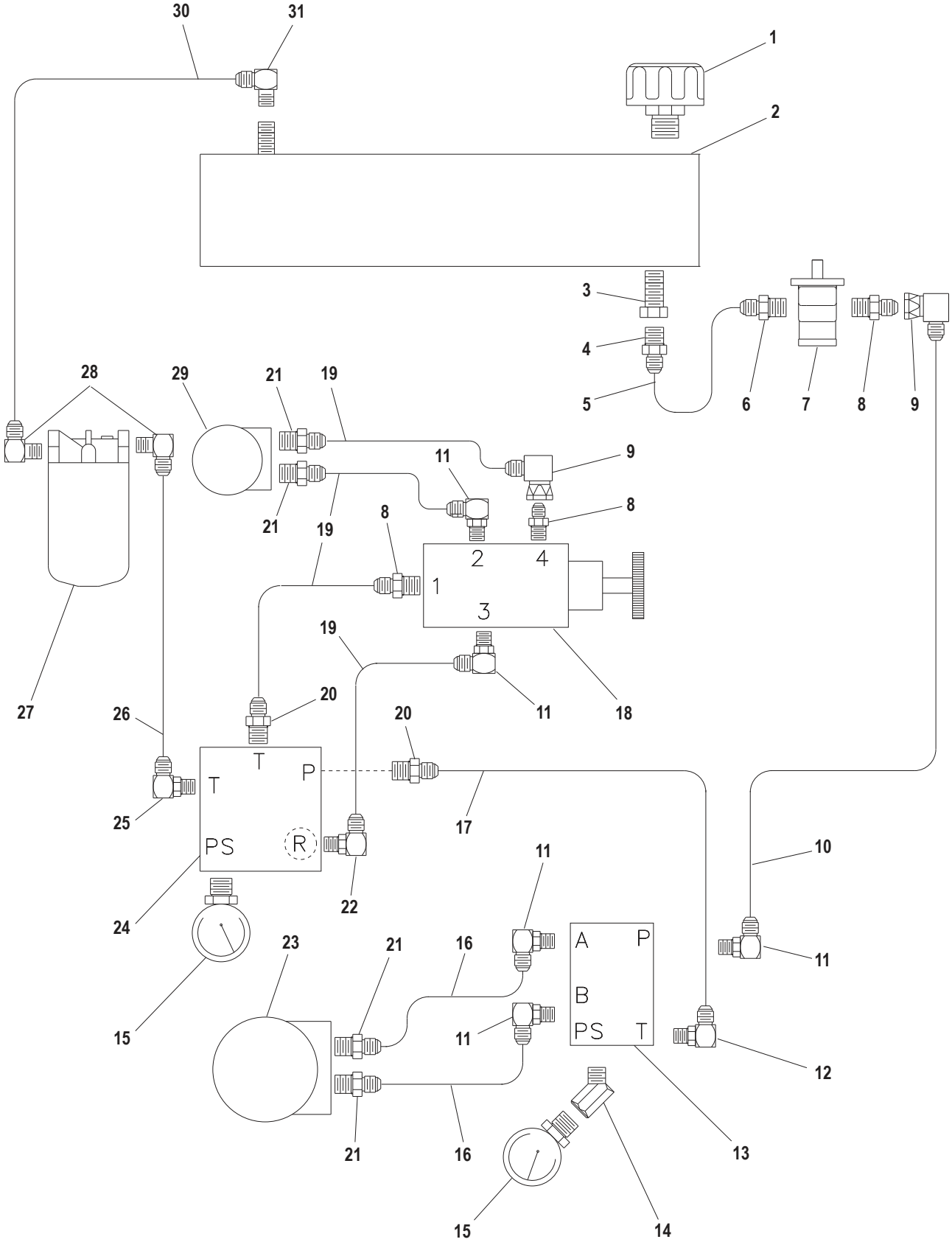

WHEN ORDERING PARTS, BE SURE TO STATE SERIAL NUMBER OF MACHINE

HYDRAULIC PARTS

Ref. No.	Part Number	Description	No. Req'd
1	004900	Filler Pressure Breather Cap	1
2	340028-10	Hydraulic Tank *(Part of Frame)*	1
3	340009	Strainer	1
4	340039	Hydraulic Fitting	1
5	340043	Hydraulic Hose 20" Long	1
6	FW65224	Straight Adpater	1
7	340003	Hydraulic Pump	1
8	FW65217	Straight Adapter	3
9	FW71909	90 Degree Elbow	2
10	340046	Hydraulic Hose 53" Long	1
11	FW65216	90 Degree Elbow	5
12	340040	Hydraulic Fitting	1
13	055682	Manifold - Airlock Solenoid Valve	1
14	FW71609	Street Elbow	1
15	012044	Pressure Gauge	2
16	340049	Hydraulic Hose 18" Long	2
17	340048	Hydraulic Hose 24" Long	1
18	340027	Valve - Roll Reversing	1
19	340047	Hydraulic Hose 28" Long	4
20	055308	Straight Adapter	2
21	340041	Hydraulic Fitting	4
22	055274	90 Degree Elbow	1
23	055552	Hydraulic Motor	1
24	055730	Manifold - Roll Speed Control	1
25	340042	Hydraulic Fitting	1
26	340044	Hydraulic Hose 25" Long	1
27	021617	Return Filter	1
	021618	Filter Element	1
28	085013	90 Degree Elbow	2
29	080482	Motor	1
30	340076	Hydraulic Hose 15" Long	1
31	340075	90 Degree Elbow	1

WHEN ORDERING PARTS, BE SURE TO STATE SERIAL NUMBER OF MACHINE

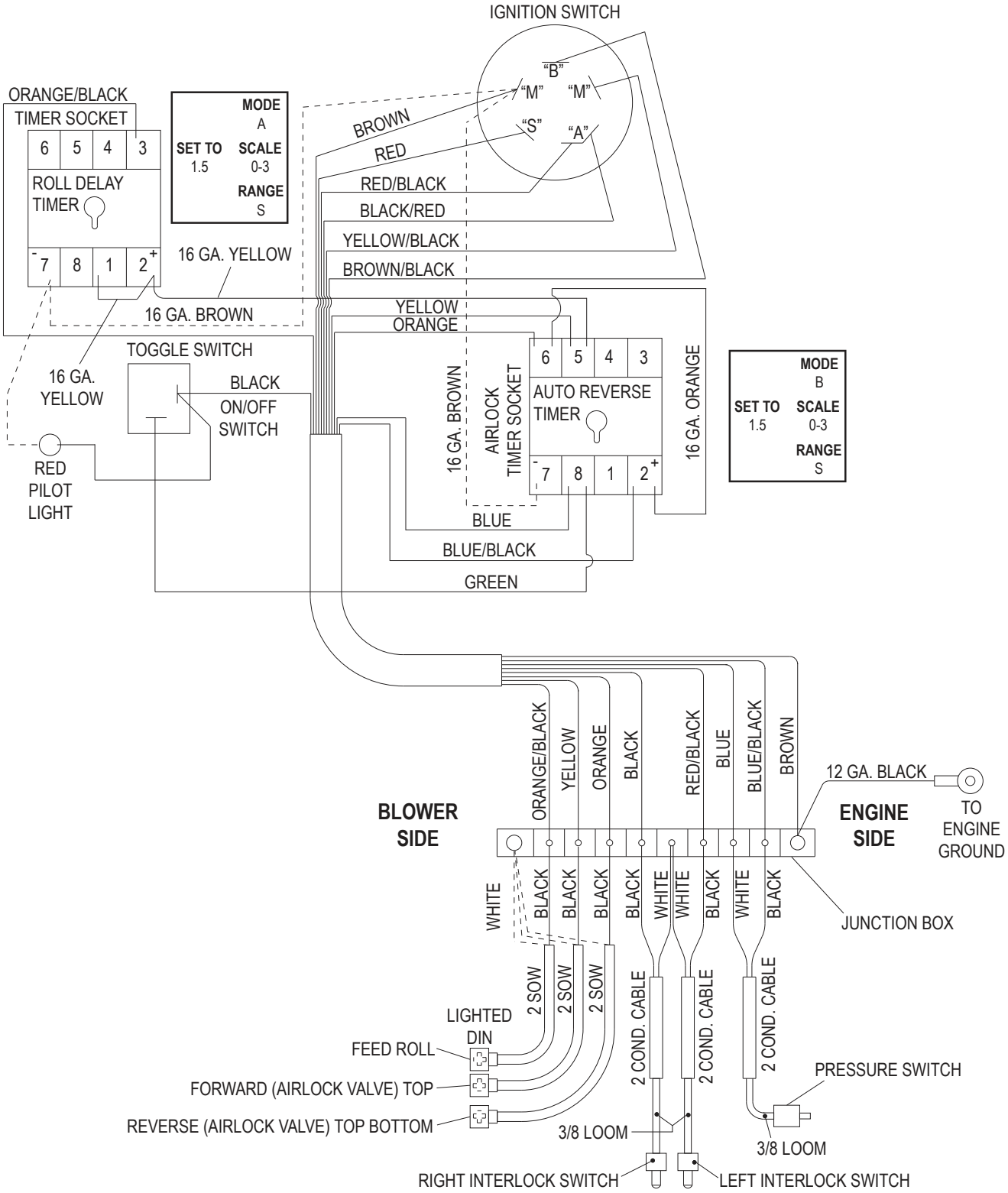

WHEN ORDERING PARTS, BE SURE TO STATE SERIAL NUMBER OF MACHINE

ENGINE AND CONTROL BOX WIRING

Part Number	Description	No. Req'd
340064	Control Box Assembly	1
340051	Control Box	1
052112	Toggle Switch - SPST	1
080526	Switch Boot	1
080654	Ignition Switch	1
FW71584	Timer Relay	2
FW71585	Timer Relay Socket	2
006245	Red Pilot Light	1
340070	Control Box Wiring Harness	1
035078	Connector	3
071208	Female Connector Assembly	3
031401	Junction Block - 8 Stud	1
035026	Electric Tini Tach	1
052436	Interlock Switch	2
055659	Pressure Switch	1
085142	Throttle Cable Assembly	1
080567	Choke Cable Assembly	1
031267	Cushioned Loop Clamp	4
060281	Loop Clamp	2

WHEN ORDERING PARTS, BE SURE TO STATE SERIAL NUMBER OF MACHINE

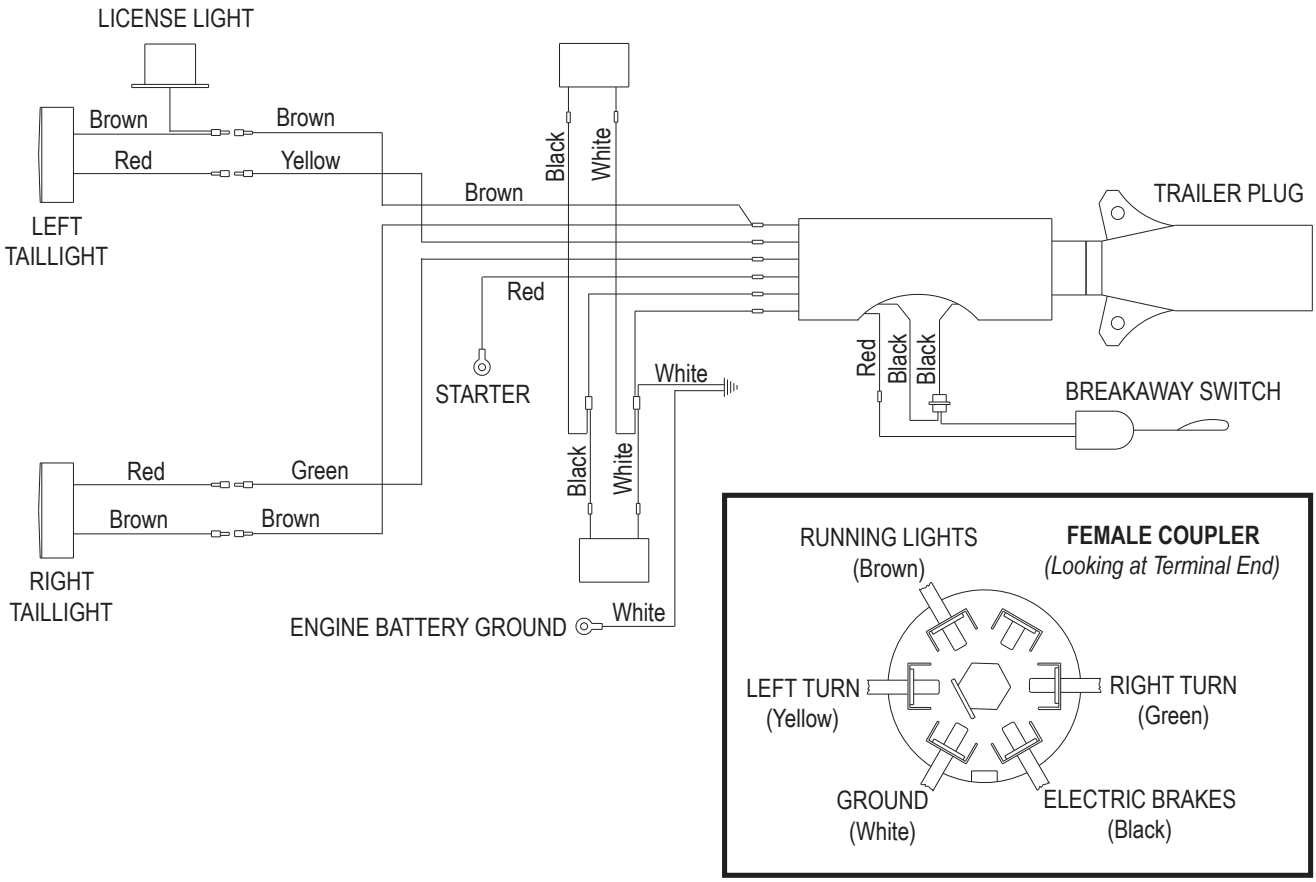

TRAILER WIRING

Part Number	Description	No. Req'd
340071	BB200 Trailer Wiring Harness	1
340071-01	BB200 Brake Wiring Harness	1
005137	Taillight, Left	1
005138	Taillight, Right	1
005436	License Light	1
023424	Breakaway Switch	1
075592	7-Blade Trailer Plug	1
060281	Loop Clamp	1

NOTE:

See Pages 24-25 for locations of components.

WHEN ORDERING PARTS, BE SURE TO STATE SERIAL NUMBER OF MACHINE

TOOL KIT AND DISHARGE HOSE

Part Number	Description	No. Req'd
012681A	Touch-Up Paint (FINN Beige - 4.5 oz. Aerosol)	1
012681T	Touch-Up Paint (FINN Beige - 0.5 oz. Wet)	1
	Engine Operators Manual	1
	Blower Operators Manual	1
LBBB200-SE	Bark Blower BB-200 Parts & Operators Manual	1
340001	50' Discharge Hose Assembly	2

RECOMMENDED SPARE PARTS

Part Number	Description
340011	Blower Air Filter
021618	Hydraulic Oil Return Filter Element
KU2405002	Fuel Line Filter
KU1205001	Engine Oil Filter
KU2488303-S1	Air Cleaner Element
055113	Airlock Knives (2 Knives)

Recommended spare parts are available to help avoid unnecessary down time.

WHEN ORDERING PARTS, BE SURE TO STATE SERIAL NUMBER OF MACHINE

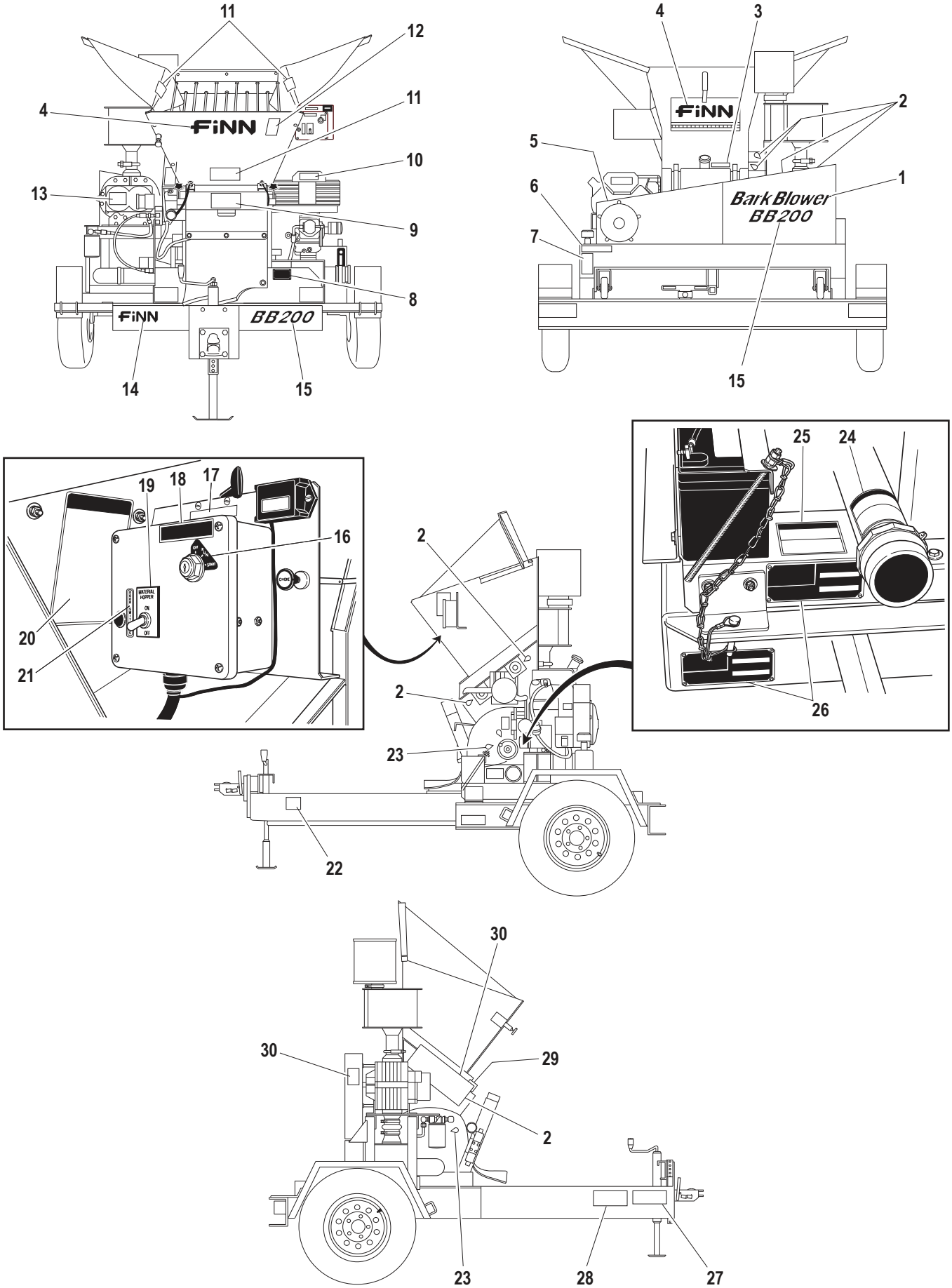

WHEN ORDERING PARTS, BE SURE TO STATE SERIAL NUMBER OF MACHINE

DECAL AND PLATE LOCATIONS

Ref. No.	Part Number	Description	No. Req'd
1	340063	Decal "BB200 Bark Blower"	1
2	007231	Decal "Service Daily"	7
3	031331	Decal "GASOLINE"	1
4	031235	Decal "FINN"	2
5	022357	Decal "WARNING . . . Turn Engine Off"	1
6	012272	Decal "HYDRAULIC FLUID ONLY"	1
7	021665	Decal "Hydraulic System Instructions"	1
8	012260	Metal Plate "IMPORTANT . . . Maintain All Safety Decals"	1
9	055219	Decal "DANGER . . . Sharp Knives"	1
10	012278	Decal "DANGER . . . Hot Exhaust"	1
11	020068	Decal "DANGER . . . Rotating Parts"	3
12	023857	Decal "CAUTION . . . Wear Hearing Protection"	1
13	052178	Decal "IMPORTANT . . . If Machine Is To Remain On"	1
14	071097	Decal "FINN" (Small/Red)	2
15	340062	Decal "BB200"	2
16	KL2411303	Decal "Ignition Switch"	1
17	007535	Decal "Throttle"	1
18	KL2511317	Decal "Stopping Instructions"	1
19	045063-11	Plate "Material Hopper . . . ON/OFF"	1
20	340068	Decal "BB200 Operating Instructions"	1
21	340069	Decal "Door Switch"	1
22	023423	Decal "WARNING . . . Breakaway Switch"	1
23	007230	Decal "Service Daily"	3
24	055735	Decal " WARNING . . . Material Under High Pressure Hazard"	1
25	055280	Decal "WARNING . . . Thrown Object Hazard"	1
26	011690	Nameplate "FINN"	2
27	031228	Decal "CAUTION . . . Safety Chain Installation"	1
28	031227	Decal "CAUTION . . . Always Inspect Tow Vehicle"	1
29	022690	Decal "CAUTION . . . Wear Proper Eye Protection"	1
30	012179	Decal "WARNING . . . Do Not Operate Without Guards"	2

WHEN ORDERING PARTS, BE SURE TO STATE SERIAL NUMBER OF MACHINE

WARRANTY

Finn warrants to the original Purchaser for use (or rental to others for use) all new construction machinery and attachments therefore manufactured by Finn to be free from defects in material and workmanship for a period of 12 months from date of purchase or 1200 hours of use, whichever comes first. Replacement parts provided under the terms of this warranty are warranted for the remainder of the warranty period applicable to the product in which installed, as if such parts were original components of that product. Finn makes no warranty with respect to (a) allied equipment or trade accessories not manufactured by it (such as, but not limited to tires, ignitions, starters, hose, batteries, magnetos, carburetors, engines or like or unlike equipment or accessories), such being subject to the warranty, if any, provided by their respective manufactures; or (b) secondhand, used, altered, or rebuilt machines. Further, the warranty herein expressed shall be rendered null and void to the extent any defect or failure of the products warranted hereby arises out of or is caused by accessories or component parts not manufactured or supplied by Finn, whether same are supplied by Purchaser, dealers or any other party. THE WARRANTY DESCRIBED IN THIS PARAGRAPH SHALL BE IN LIEU OF ALL OTHER WARRANTIES, EXPRESS OR IMPLIED, INCLUDING, BUT NOT LIMITED TO, ANY IMPLIED WARRANTY OF MERCHANTABILITY OR FITNESS FOR A PARTICULAR PURPOSE.

Upon notification of Finn during the above-stated warranty period of any failure to conform to this warranty, and upon inspection by Finn to verify said nonconformity and verify the continuing existence of the warranty period, Finn will provide a new part or a repaired part, whichever Finn elects, to replace the part found to be defective. Such parts will be provided without charge to the Purchaser during normal working hours at a place of business of a Finn dealer or other establishment authorized by Finn to effect said repairs or replacements, but Purchaser shall bear all costs of transporting the product to and from such place of business or establishment. Correction of nonconformities, in the manner and for the period time provided above, shall constitute fulfillment of all liabilities of Finn under this contract.

THE REMEDIES OF THE USER SET FORTH HEREIN ARE EXCLUSIVE, WITHOUT REGARD TO WHETHER ANY DEFECT WAS DISCOVERABLE OR LATENT AT THE TIME OF DELIVERY OF THE PRODUCT TO THE PURCHASER.

The essential purpose of this exclusive remedy shall be to provide the Purchaser with repair or replacement of parts that prove to be defective within the period and under the conditions previously set forth. This exclusive remedy shall not have failed of its essential purpose (as that term is used in the Uniform Commercial Code) provided Finn remains willing to repair or replace defective parts within a commercially reasonable time after it obtains actual knowledge of the existence of a particular defect.

IN NO EVENT SHALL FINN BE LIABLE FOR ANY SPECIAL, CONSEQUENTIAL, INCIDENTAL OR INDIRECT DAMAGES, INCLUDING LOST PROFITS OR LOST COMMERCIAL OPPORTUNITIES, WITH RESPECT TO THE SALE OF THE ABOVE WARRANTED PRODUCT OR ANYTHING DONE TN CONNECTION THEREWITH, OR FOR PROPERTY DAMAGE SUSTAINED BY A PERSON CLAIMING TO BE A THIRD PART BENEFICIARY OF A SURVIVING WARRANTY UNDER THE LAW OF ANY JURISDICTION.

NOTICE

FINN CORPORATION URGES THE USE OF ONLY FINN CORPORATION SUPPLIED PARTS AND ATTACHMENTS TO ASSURE PROPER PERFORMANCE AND SAFE OPERATION OF FINN CORPORATION EQUIPMENT. INSIST ON PARTS AND ATTACHMENTS MANUFACTURED OR SUPPLIED BY FINN CORPORATION WHEN YOU PURCHASE, REPAIR OR REPLACE YOUR FINN EQUIPMENT AND ATTACHMENTS. BECAUSE FINN CORPORATION CANNOT ASSURE THAT PARTS AND ATTACHMENTS NOT MANUFACTURED OR SUPPLIED BY FINN MEET FINN CORPORATION'S QUALITY STANDARDS, SPECIFICATIONS, OR OPERATING REQUIREMENTS, OUR WARRANTY IS NOT EFFECTIVE TO THE EXTENT ANY FAILURE OF OR DEFECT IN A FINN CORPORATION PRODUCT ARISES FROM OR IS CAUSED BY PARTS, ATTACHMENTS OR COMPONENTS NOT ORIGINATING WITH FINN CORPORATION. USE OF FINN CORPORATION EQUIPMENT WITH PARTS AND ATTACHMENTS NOT MANUFACTURED OR SUPPLIED BY FINN COULD RESULT IN PERSONAL INJURY.

Effective December 8, 1995

CALIFORNIA

Proposition 65 Warning

The engine exhaust and some of its constituents are known to the State of California to cause cancer, birth defects, and other reproductive harm.

CALIFORNIA

Proposition 65 Warning

Battery posts, terminals and related accessories contain lead and lead compounds, chemicals known to the State of California to cause cancer and reproductive harm. Wash hands after handling.