FINN CORPORATION

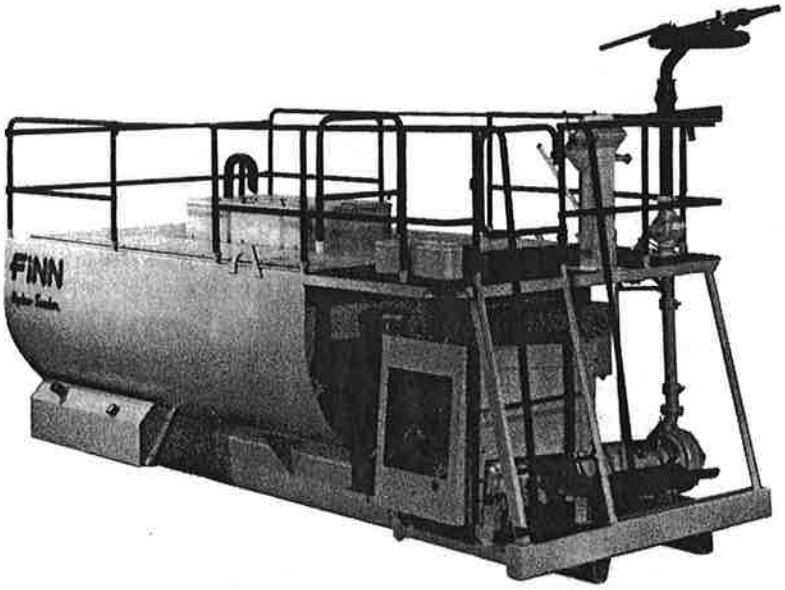

Hydroseeder

PARTS MANUAL

MODEL NO. T-170 SERIAL NO. RE

W A R R A N T Y

Finn warrants to the original Purchaser for use (or rental to others for use) all new construction machinery and attachments therefore manufactured by Finn to be free from defects in material and workmanship for a period of 12 months from date of purchase or 1200 hours of use, whichever comes first. Replacement parts provided under the terms of this warranty are warranted for the remainder of the warranty period applicable to the product in which installed, as if such parts were original components of that product. Finn makes no warranty with respect to (a) allied equipment or trade accessories not manufactured by it (such as, but not limited to tires, ignitions, starters, batteries, magnetos, carburetors, engines or like or unlike equipment or accessories), such being subject to the warranty, if any, provided by their respective manufacturers; or (b) second-hand, used, altered, or rebuilt machines. THE WARRANTY DESCRIBED IN THIS PARAGRAPH SHALL BE IN LIEU OF ALL OTHER WARRANTIES, EXPRESS OR IMPLIED, INCLUDING, BUT NOT LIMITED TO, ANY IMPLIED WARRANTY OR MERCHANTABILITY OR FITNESS FOR A PARTICULAR PURPOSE.

Upon notification of Finn within the above-stated warranty period of any failure to conform to this warranty, and upon inspection by Finn to verify said nonconformity and to verify the continuing existence of the warranty period, Finn will provide a new part or a repaired part, whichever Finn elects, to replace the part found to be defective. Such parts will be provided without charge to the Purchaser during normal working hours at a place of business of a Finn dealer or other establishment authorized by Finn to effect said repairs or replacements, but Purchaser shall bear all costs of transporting the product to and from such place of business or establishment. Correction of nonconformities, in the manner and for the period time provided above, shall constitute fulfillment of all liabilities of Finn under this contract.

THE REMEDIES OF THE USER SET FORTH HEREIN ARE EXCLUSIVE, WITHOUT REGARD TO WHETHER ANY DEFECT WAS DISCOVERABLE OR LATENT AT THE TIME OF DELIVERY OF THE PRODUCT TO THE PURCHASER. The essential purpose of this exclusive remedy shall be to provide the Purchaser with repair or replacement of parts that prove to be defective within the period and under the conditions previously set forth. This exclusive remedy shall not have failed of its essential purpose (as that term is used in the Uniform Commercial Code) provided Finn remains willing to repair or replace defective parts within a commercially reasonable time after it obtains actual knowledge of the existence of a particular defect.

IN NO EVENT SHALL FINN BE LIABLE FOR ANY SPECIAL, CONSEQUENTIAL, INCIDENTAL OR INDIRECT DAMAGES, INCLUDING LOST PROFITS OR LOST COMMERCIAL OPPORTUNITIES, WITH RESPECT TO THE SALE OF THE ABOVE-WARRANTED PRODUCT OR ANYTHING DONE IN CONNECTION THEREWITH, OR FOR PROPERTY DAMAGE SUSTAINED BY A PERSON CLAIMING TO BE A THIRD-PARTY BENEFICIARY OF A SURVIVING WARRANTY UNDER THE LAW OF ANY JURISDICTION.

Effective October 1, 1989

INDEX

Lubrication and Fluids Chart	2-3
Tool Kit	4
Tank Top Parts	5
Pump, Piping and Discharge Assembly	6-7
Discharge Boom Assembly	8
Pump Parts	9
Control Tower	10-11
Hydraulic System	12-13
Agitator Assembly	14-15
Hatch Assembly	16
Hydraulic Agitator Drive	17
Electrical System	18-19
Power System	20-21
Air Cleaner and Exhaust Assembly	22-23
Power Take-Off Assembly	24-25
Decal and Location	26-27
Discharge Hose Extensions	28
Spare Parts, Repair Kits and Miscellaneous Parts	29
Hose Reel Assembly	30-31

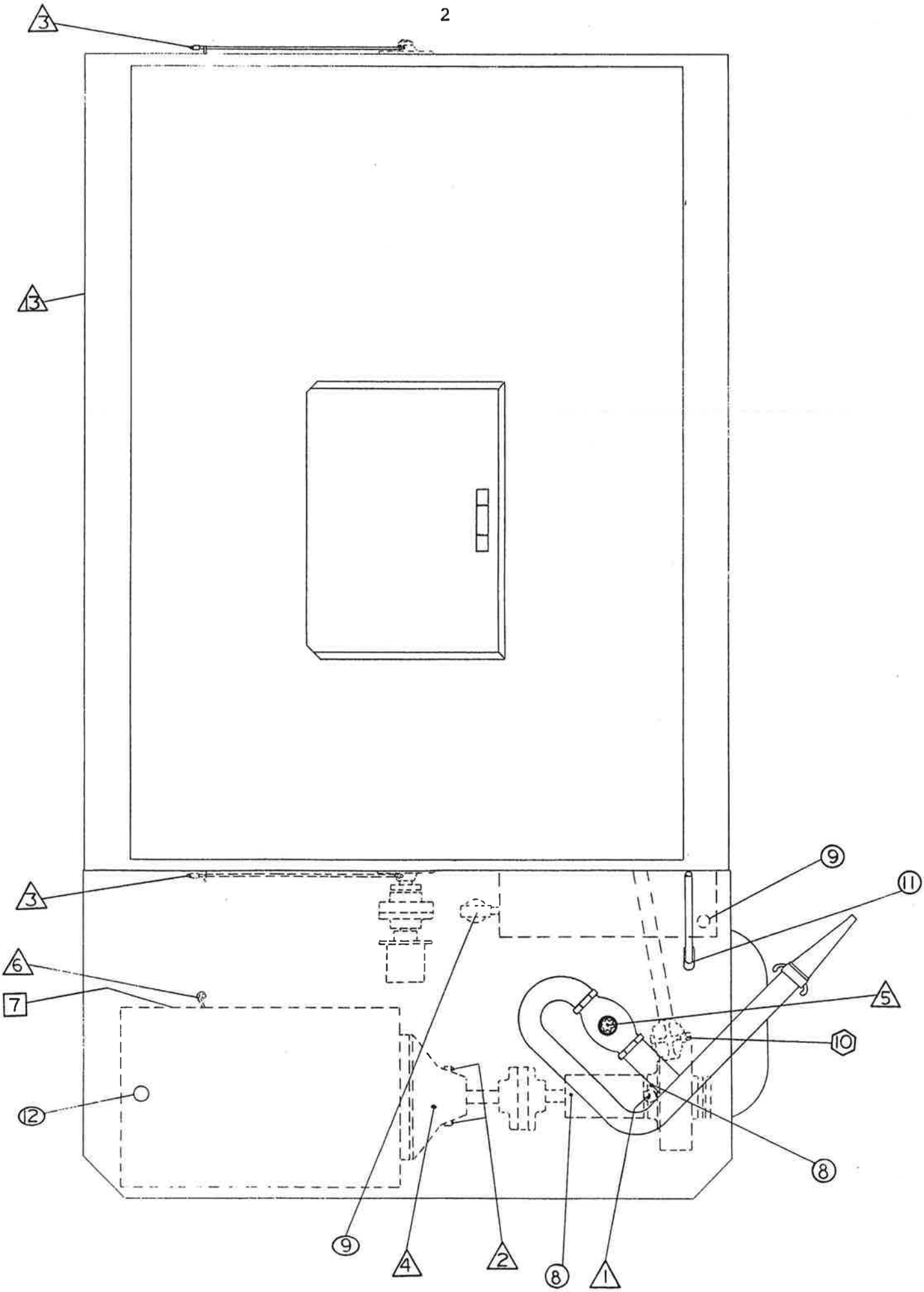
3
3
3
6
7
12
9
11
5
10
8
9
4
2
8
1

LUBRICATION AND FLUIDS CHART

	Location	Lubricant or Fluid Used	Frequency	Number Fittings
1.	Check grease level in pressure lubricator	BL	Daily	1
2.	Check clutch lever bearings	CL	Daily	2
3.	Grease agitator shaft bearings	CL	Daily	4
4.	Grease clutch shaft bearings	CL	Daily	1
5.	Grease discharge swivels	CL	Daily	2
6.	Check engine oil level	MO	Daily	1
7.	Change engine oil and filter	MO	See engine manual	1
8.	Grease pump bearings	BL	Weekly	2
9.	Check hydraulic fluid level	HO	Weekly	1
	Change hydraulic fluid and filter	HO	Seasonally or 500 hrs	1
10.	Grease discharge & recirculation valves	SL	Each Load	2
11.	Grease valve arm lever	CL	Weekly	1
12.	Change engine coolant	AF	Seasonally	1
13.	Check fuel tank	DF	Daily	1
14.	Grease Clutch Handle	CL	Weekly	1

LUBRICANT OR FLUID USED

BL	Bearing lube (soda base)
CL	Chassis lubricant
MO	Motor Oil SAE 30 CD/SF
HO	Hydraulic fluid 10W-40 SE Motor Oil
SL	Special stick lubricant
AF	50/50 antifreeze-water mixture
DF	Diesel Fuel

TIME KEY

△	DAILY
○	WEEKLY
□	SEE ENGINE MANUAL
⬡	EACH LOAD
⬭	SEASONALLY OR 500 HOURS

FLUID CAPACITIES

Diesel fuel	41 gallons
Engine oil	See engine manual
Engine coolant (50/50 antifreeze-water mixture	4 gallons
Hydraulic fluid	25 gallons

WHEN ORDERING PARTS, BE SURE TO STATE SERIAL NUMBER OF MACHINE

TOOL KIT

Part No.	Description		No. Req'd
008465	Nozzle, Long Distance		1
011703	Nozzle Assembly, Long Distance		1
	001042 Nozzle, Long Distance	1	
	006512 Gasket, Nozzle	1	
	002191 Coupling, Male	1	
	160540 Nipple	1	
	160768 Bushing	1	
011890	Nozzle Assembly, Wide Ribbon		1
	011861 Nozzle, Wide Ribbon	1	
	002191 Coupling, Male	1	
	160769 Bushing	1	
011891	Nozzle Assembly, Narrow Ribbon		1
	011860 Nozzle, Narrow Ribbon	1	
	002191 Coupling, Male	1	
	160769 Bushing	1	
011706	Nozzle Assembly, Wide Ribbon		1
	006604 Nozzle, Wide Ribbon	1	
	002191 Coupling, Male	1	
	160766 Bushing	1	
011707	Nozzle Assembly, Narrow Ribbon		1
	006605 Nozzle, Narrow Ribbon	1	
	002191 Coupling, Male	1	
	160766 Bushing	1	
021375	Grease Gun		1
	020365 Cartridge, Grease	1	
000698	Grease, Automatic Lubricator		1
007469	Lube Sticks, Discharge and Recirculation Valves		1
002190	Cap w/Gasket-Main Tank Drain		1
006513	Gasket, Coupler		1
005220	Impeller Wrench		1
008204	Paint, Touch Up		1
008376	Engine Parts Manual		1
008375	Engine Operator's Manual		1
	Parts Manual		1
	Instruction Manual		1

WHEN ORDERING PARTS, BE SURE TO STATE SERIAL NUMBER OF MACHINE

TANK TOP PARTS

Ref. No.	Part Number	Description	No. Req'd
1	008447	Tank Top	1
	190047	Gasket	32'
2	008413	Gate Assembly	1
	008411-03	Top Hinge	1
	008411-04	Bottom Hinge	1
	008412	Gate	1
	012052	Spring, Gate	1
3	041001	Left Rear Guard Rail	1
4	041000	Right Rear Guard Rail	1
	012042	Boom Holddown Arm	1
	031245	Snapper Pin	1
	005161	Nozzle Tie-Down Strap	1
	008454-02	Boom Clamping Strap	1
	002258	Boom Locking Handle	1
5	041002-01	Left Front Guard Rail	1
6	041002-02	Right Front Guard Rail	1
7	005121	Slide Gate	2
8	008265	Front Rail	1
9	012273	Hand Rail	2
10	007523	Hatch Rail	1
11	008457	Fill Port	1
	002191	Adapter	1
12	008470	Fill Plug	1
13	011313	Tool Box	1
	011398	Mounting Pad	4

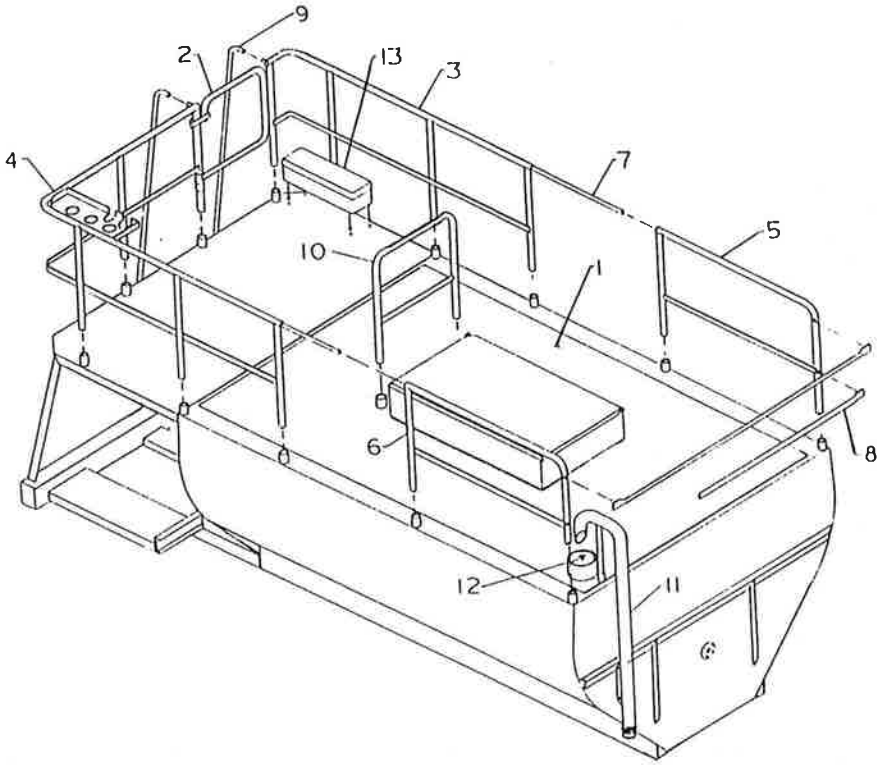

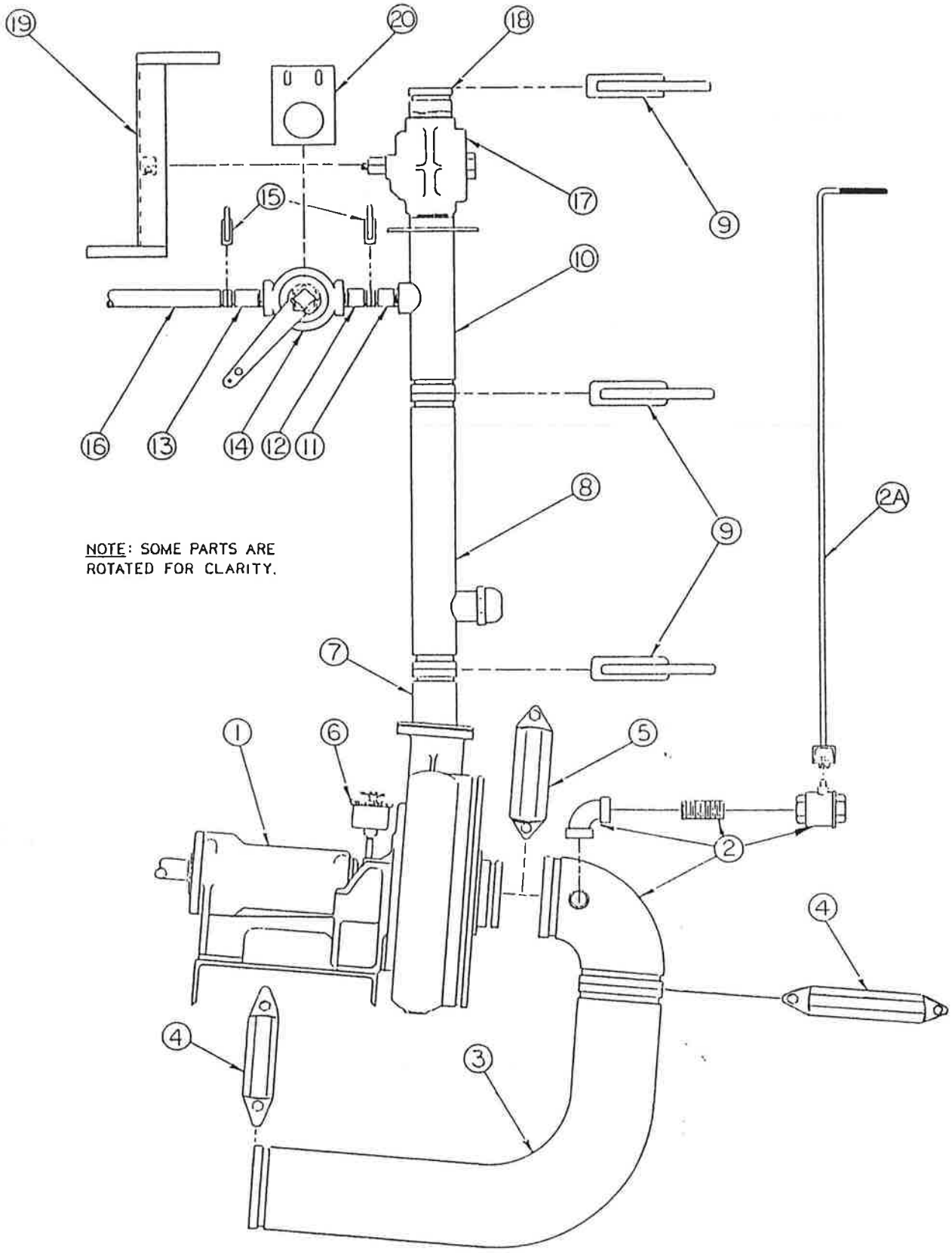

WHEN ORDERING PARTS, BE SURE TO STATE SERIAL NUMBER OF MACHINE

PUMP, PIPING, AND DISCHARGE ASSEMBLY

Ref No.	Part No.	Description	No. Req'd	
1	005143	Pump Assy (See pg 9 for parts)		1
	X1032	Bolt, Washer, Locknut	4	
2	12142	Suction Elbow/Bleed Valve Assy		1
	12142-01	Suction Elbow	1	
	160010	Elbow	1	
	160305	Nipple	1	
	21559	Valve	1	
2A	12143-01	Bleed Valve Handle		1
	12143-09	Bearing Pad		1
3	12141	Suction Pipe		1
4	011736	Pipe Clamp		2
	011919	Seal, Pipe Clamp	2	
5	008471	Pipe Clamp, Reducing		1
	008472	Seal, Pipe Clamp	1	
6	002383	Pump Lubricator		1
	008189	Plunger	1	
	008190	Screw, Nut,Follower,Spring	1	
	160160	Coupling		1
	006869	Decal		1
	160389	Nipple		1
7	011726-01	Discharge Flange		1
	008469	Gasket		1
	X0828	Bolt & Nut		1
8	011726-11	Lower Discharge Pipe		1
	160263	Pipe Cap		1
9	002771	Pipe Clamp		3
	002820	Seal, Pipe Clamp	3	
10	011726-04	Upper Discharge Pipe		1
11	011727-09	Recirculation Nozzle		1
12	011727-10	Valve Inlet Nozzle		1
13	011727-11	Valve Outlet Nozzle		1
14	011776	Recirculation Valve		1
	011909	Handle	1	
	004962	Lube Screw	1	
	011950	Gasket	1	
	011951	Spring	1	
15	006721	Pipe Clamp		2
	006722	Seal, Pipe Clamp	2	
16	008456-05	Recirculation Pipe		1
	160038	Direction Elbow		1
17	011777	Discharge Valve		1
	004962	Lube Screw	1	
	011952	Gasket	1	
	011953	Spring	1	
18	011882	Discharge to Boom Connector		1
19	011822	Valve Control Foot Pedal		1
	Z0612SCP	Set Screw		2
20	011803-01	Valve Stabilizer Plate		1

WHEN ORDERING PARTS, BE SURE TO STATE SERIAL NUMBER OF MACHINE

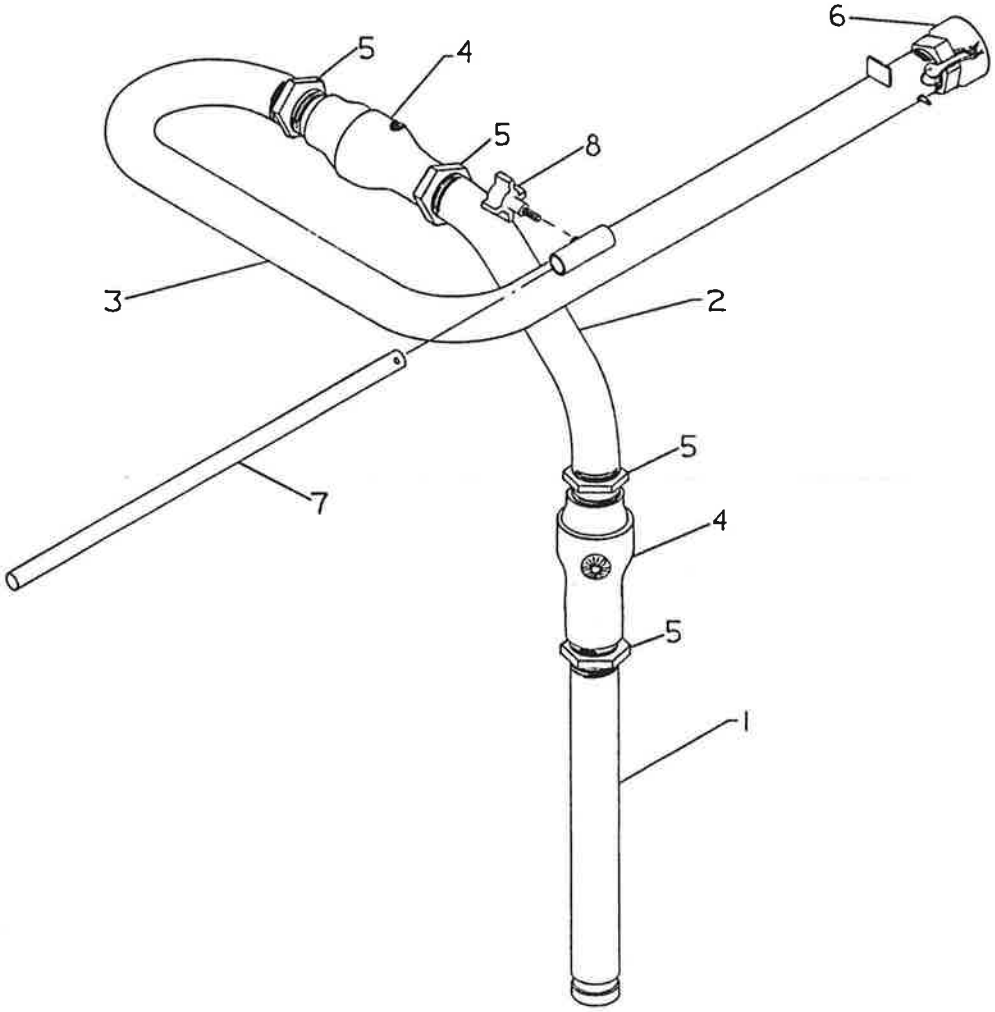

DISCHARGE BOOM ASSEMBLY

Ref No.	Part No.	Description	No. Req'd
	012043	Discharge Boom Assembly includes:	1
1	012043-16	Stand Pipe	1
2	012043-02	Lower Boom Pipe	1
3	012043-01	Upper Boom Pipe	1
4	011689	Swivel	2
5	160776	Bushing	4
6	010544	Coupler, Nozzle	1
	006513	Gasket	1
7	012043-19	Boom Handle	1
8	011914	Knob	1
	011917*	Swivel Repair Kit	2

*Not Included with #012043

WHEN ORDERING PARTS, BE SURE TO STATE SERIAL NUMBER OF MACHINE

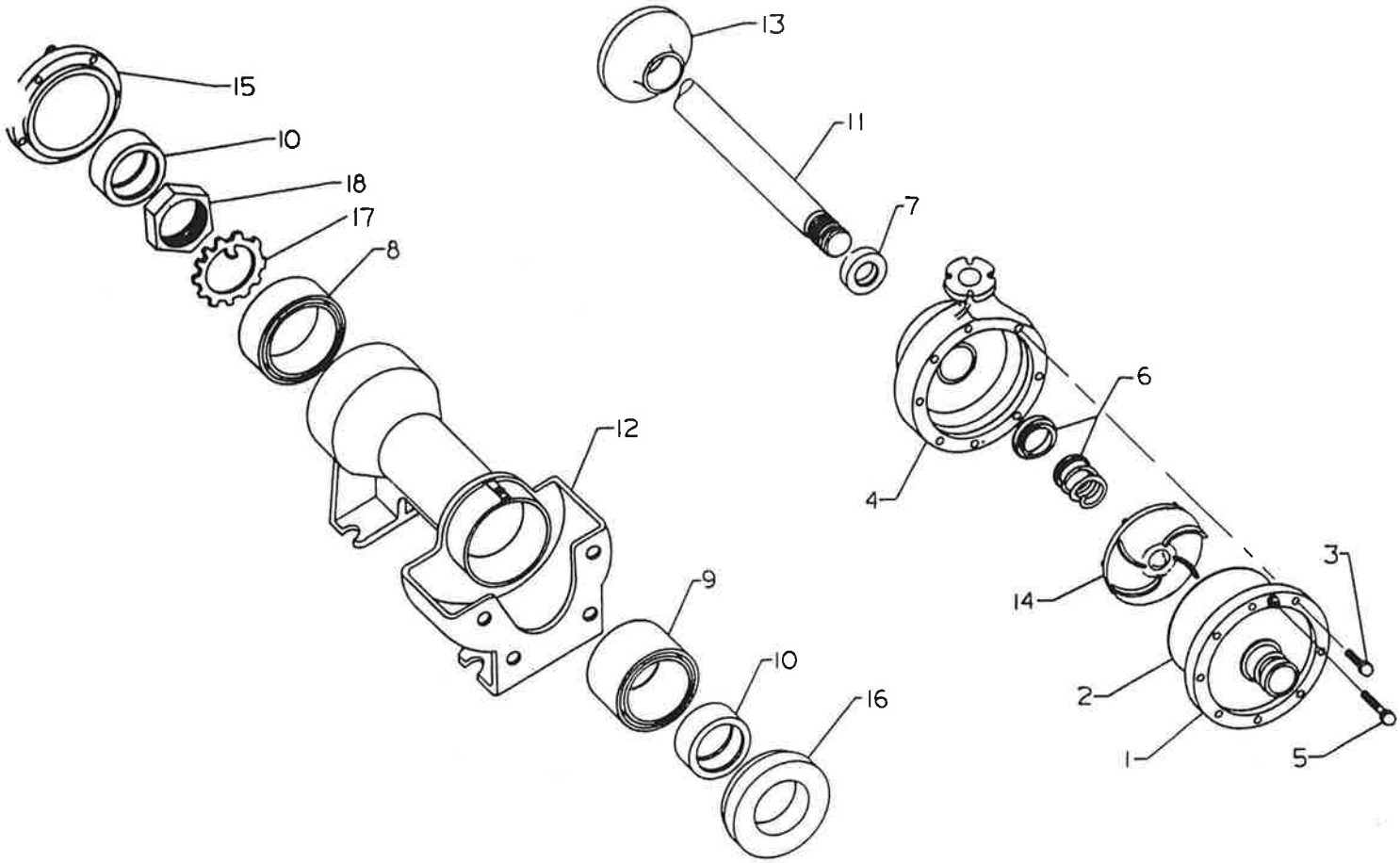

Ref No.	Part No.	Description	No.Req'd
	005143	Pump Assembly Consisting Of:	
5-1	005146	Cover, Pump Suction	1
5-2	005150	O-Ring, Suction Cover	1
5-3	X0824	Bolts, Suction Cover	8
5-4	005144	Casing	1
5-5	X0828	Bolts, Adjusting	4
5-6	006443	Seal Assembly (60BC18)	1
5-7	006444	Seal, Grease Retainer	1
5-8	006445	Bearing, Radial	1
5-9	006446	Bearing, Thrust	1
5-10	006447	Seal, Grease Retaining	2
5-11	002945	Shaft	1
5-12	002960	Frame	1
5-13	006450	Slinger, Radial Bearing	1
5-14	005145	Impeller	1
5-15	002961	Retainer, Thrust Bearing	1
5-16	006537	Retainer, Radial Bearing	1
5-17	007366	Lock, Shaft Nut	1
5-18	007367	Nut, Shaft	1

WHEN ORDERING PARTS, BE SURE TO STATE SERIAL NUMBER OF MACHINE

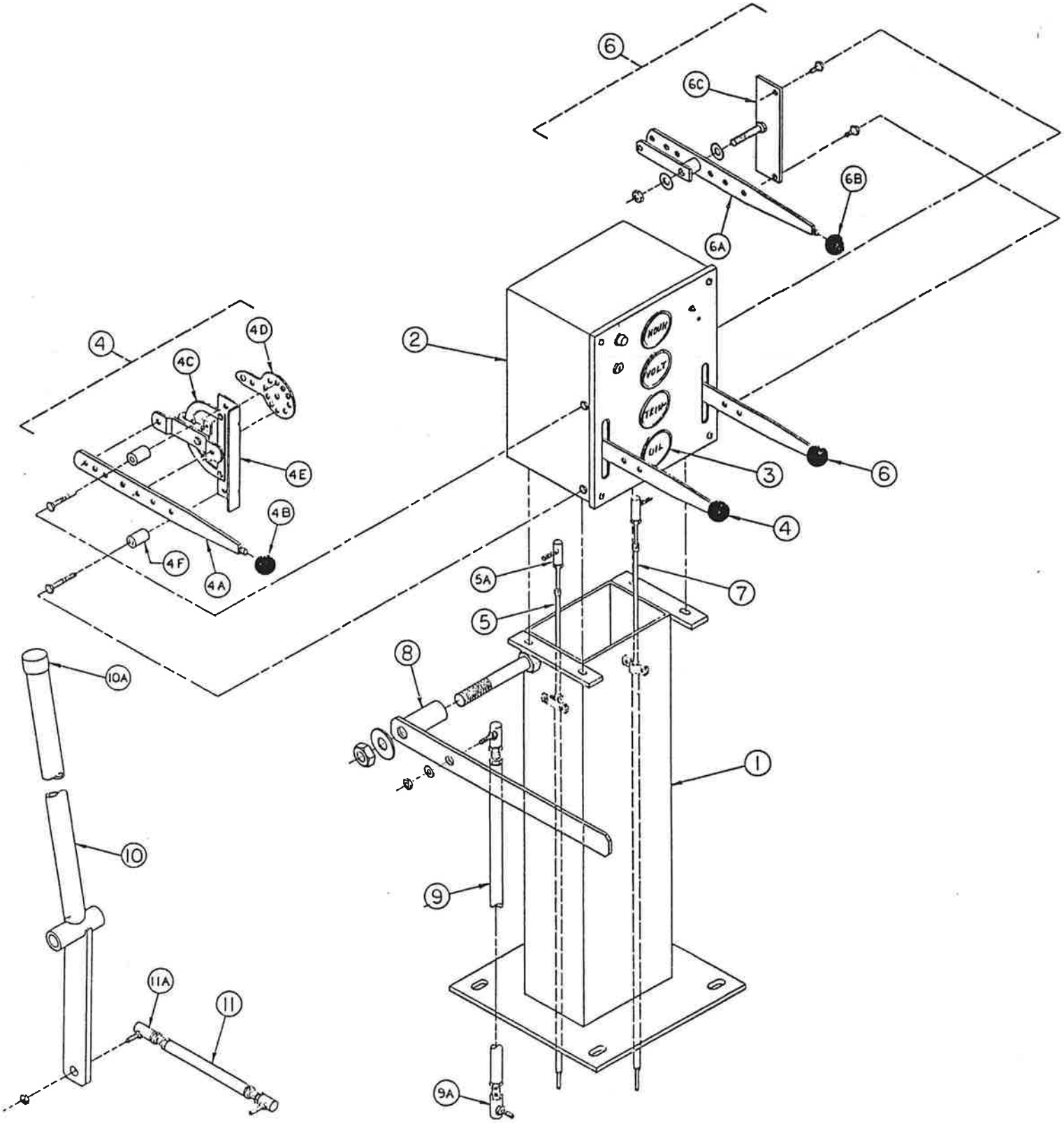

WHEN ORDERING PARTS, BE SURE TO STATE SERIAL NUMBER OF MACHINE

CONTROLS

REF NO.	PART NO.	DESCRIPTION	NO. REQ'D
	011794-01	Control Tower Assembly (includes items 1-7)	1
1	011795	Control Tower	1
2	011814-01	Control Box w/Cover (Less Components)	1
3		Gauges, Switches and Tower Wiring Harness- Order Separately (See pages 18 and 19)	
4	008474	Throttle Control Assembly	1
4A		008475 Input Lever	1 per
4B		011954 Knob	1 per
4C		011912 Control Locking Unit	1 per
4D		011918 Output Lever	1 per
4E		011212 Mounting Bracket	1 per
4F		011796-05 Spacers - 1-1/4"	2 per
5	010347	Throttle Cable	1
5A		007675 Ball Joint	1
6	008519	Agitator Control Assembly	1
6A		008519-01 Agitator Control Handle	1 per
6B		011954 Knob	1 per
6C		008519-02 Control Pivot Plate	1 per
7	006596	Agitator Control Cable	1
7A		007675 Ball Joint (control end)	1
7B		020682 Clevis (valve end- not shown)	1
8	011823	Clutch Control Handle	1
8A		000427 Handle Grip (not shown)	1
9	011819	Clutch Control Linkage	1
9A		006737 Ball Joint	2
10	011051	Recirculation Valve Handle	1
10A		022871 Plastic Cap	1
11	011818	Valve Control Linkage	1
11A		006737 Ball Joint	2

WHEN ORDERING PARTS, BE SURE TO STATE SERIAL NUMBER OF MACHINE

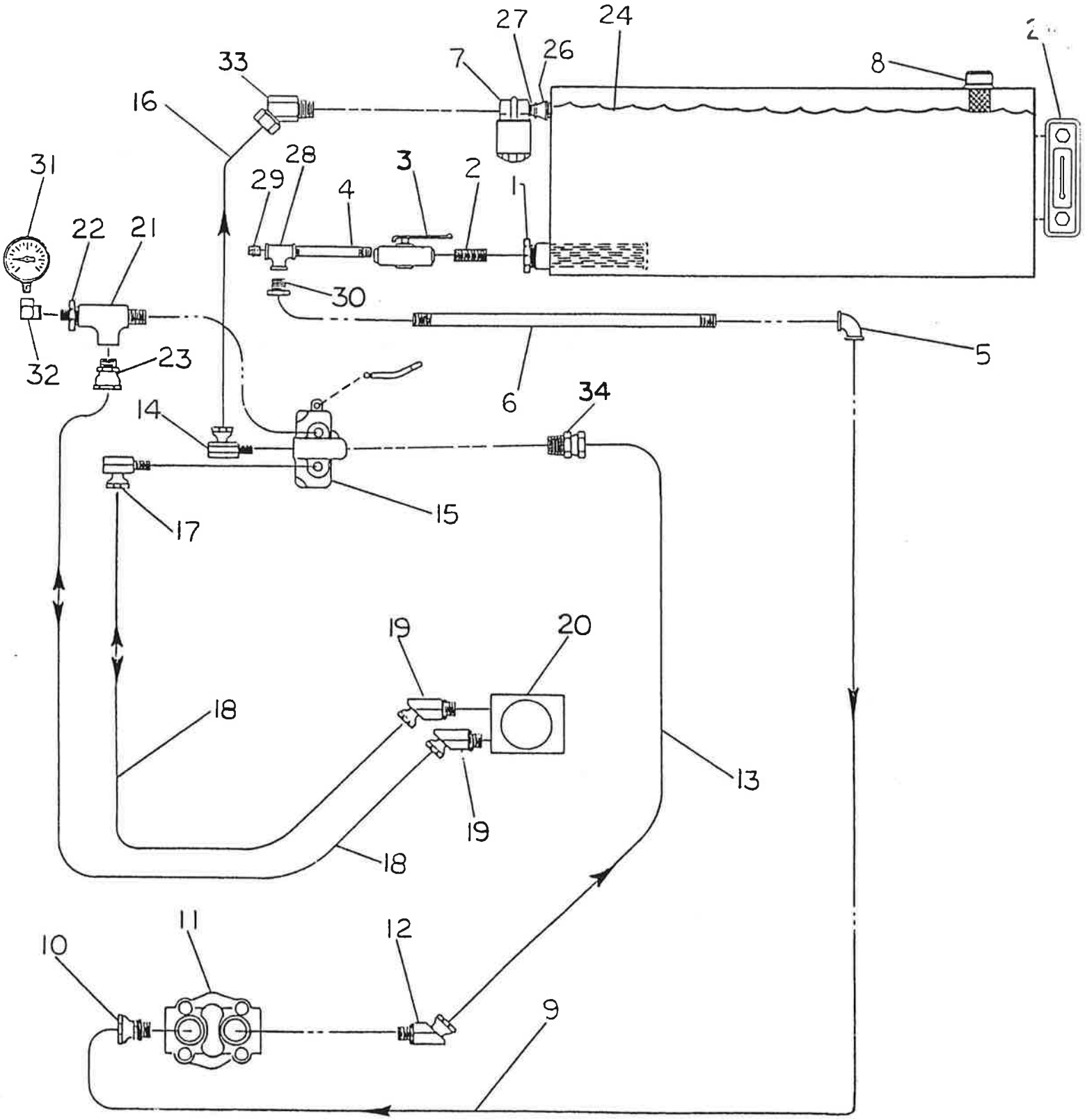

WHEN ORDERING PARTS, BE SURE TO STATE SERIAL NUMBER OF MACHINE

HYDRAULIC SYSTEM

REF NO.	PART NO.	DESCRIPTION	NO. REQ'D
1	011648	Suction Strainer	1
2	160307	Close Nipple	1
3	012083	Ball Valve	1
4	160535	Nipple	1
5	160010	Elbow - 90°	1
6	011883-01	Suction Pipe	1
7	021617	Return Filter	1
	021618	Filter Element	1
8	011783	Filler Breather Cap	1
	011784	Filter Element	1
9	008521	Suction Hose	1
10	070374	Straight Boss Adapter	1
11	008523	Hydraulic Pump	1
12	008499	Union Adapter - 90°	1
13	008527	High Pressure-Pump Discharge Hose	1
14	022862	Adapter Union-90° Swivel	1
15	008293	Hydraulic Valve	1
	011492	Valve Handle	1
16	008515	Return Hose	1
17	021669	Adapter Union - 90° Swivel	1
18	008505	Work Hose	2
19	008509	Adapter Union - 45° Boss	2
20	011859	Hydraulic Motor	1
21	022592	Tee	1
22	004741	Hex Nipple	1
23	022305	Straight Adapter Union	1
24	190073	Hydraulic Oil	25 Gallon
25	080329	Sight Gauge	1
26	160709	Bell Reducer	1
27	160303	Close Nipple	1
28	160216	Tee	1
29	160242	Pipe Plug	1
30	160750	Hex Reducer Bushing	1
31	012044	Pressure Gauge	1
32	012045	Adapter Union - 90°	1
33	080234	Adapter Union - 45° Swivel	1
34	000668	Straight Adapter Union Swivel	1

WHEN ORDERING PARTS, BE SURE TO STATE SERIAL NUMBER OF MACHINE

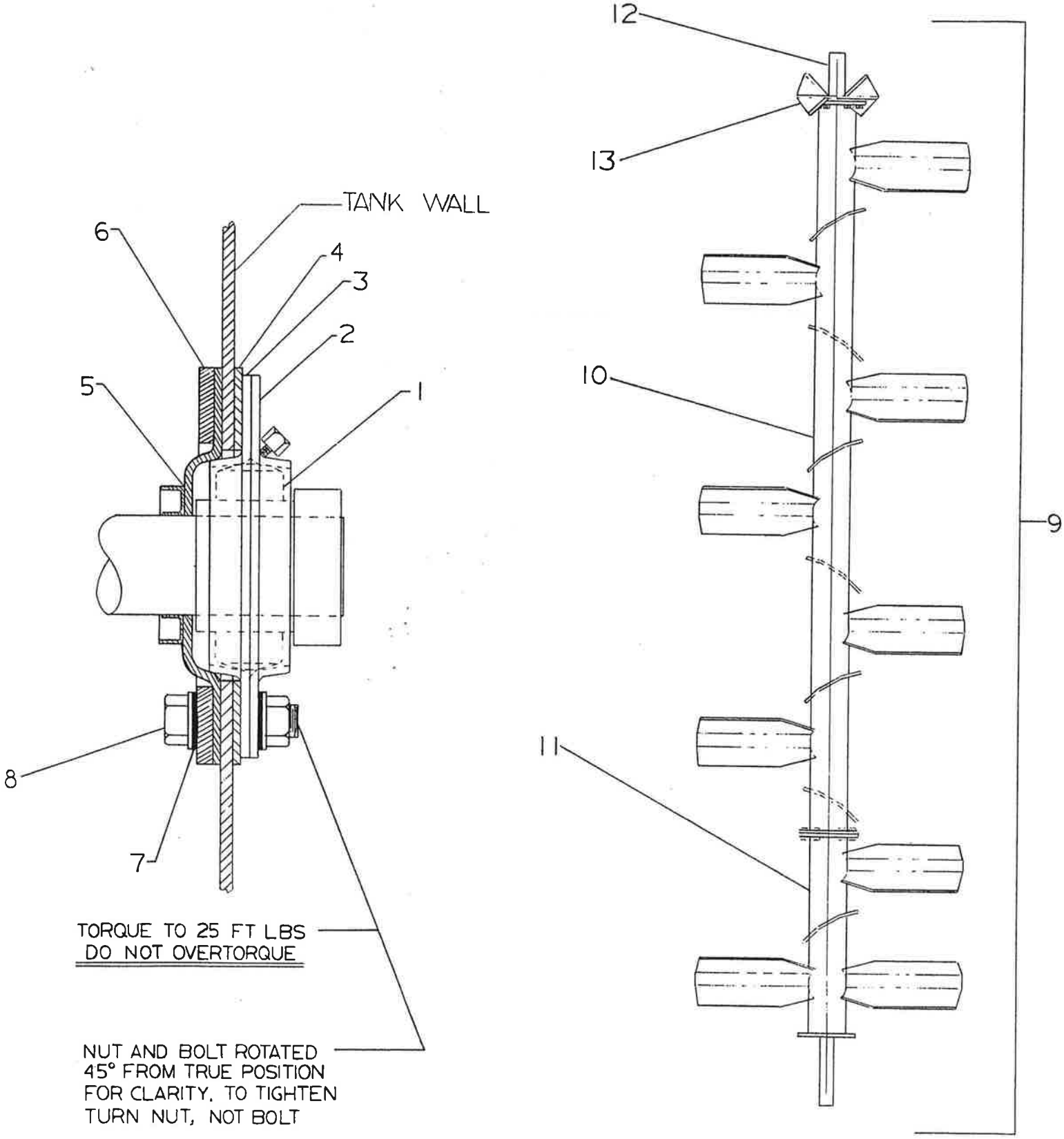

WHEN ORDERING PARTS, BE SURE TO STATE SERIAL NUMBER OF MACHINE

AGITATOR ASSEMBLY

Ref No.	Part No.	Description	No. Req'd
	007420	Bearing and Seal Assembly includes:	2
1	003022	Bearing	1 per
2	007211	Flangette w/Lube Coupling	1 per
3	007212	Flangette	1 per
4	006975	Gasket	1 per
5	007416	Shaft Seal	1 per
6	007417	Clamping Ring	1 per
7	008008	Rubber Washer	8 per
8	X0824	Bolt, Nut, Washer (2)	4 per
9	008442	Agitator Assembly	1
10	008444	Main Agitator Shaft w/Paddles	1
11	008443	Shaft Extension w/Paddles	1
12	008440-01	Stub Shaft	1
13	005027-03	Bolt-On-Paddle	2

WHEN ORDERING PARTS, BE SURE TO STATE SERIAL NUMBER OF MACHINE

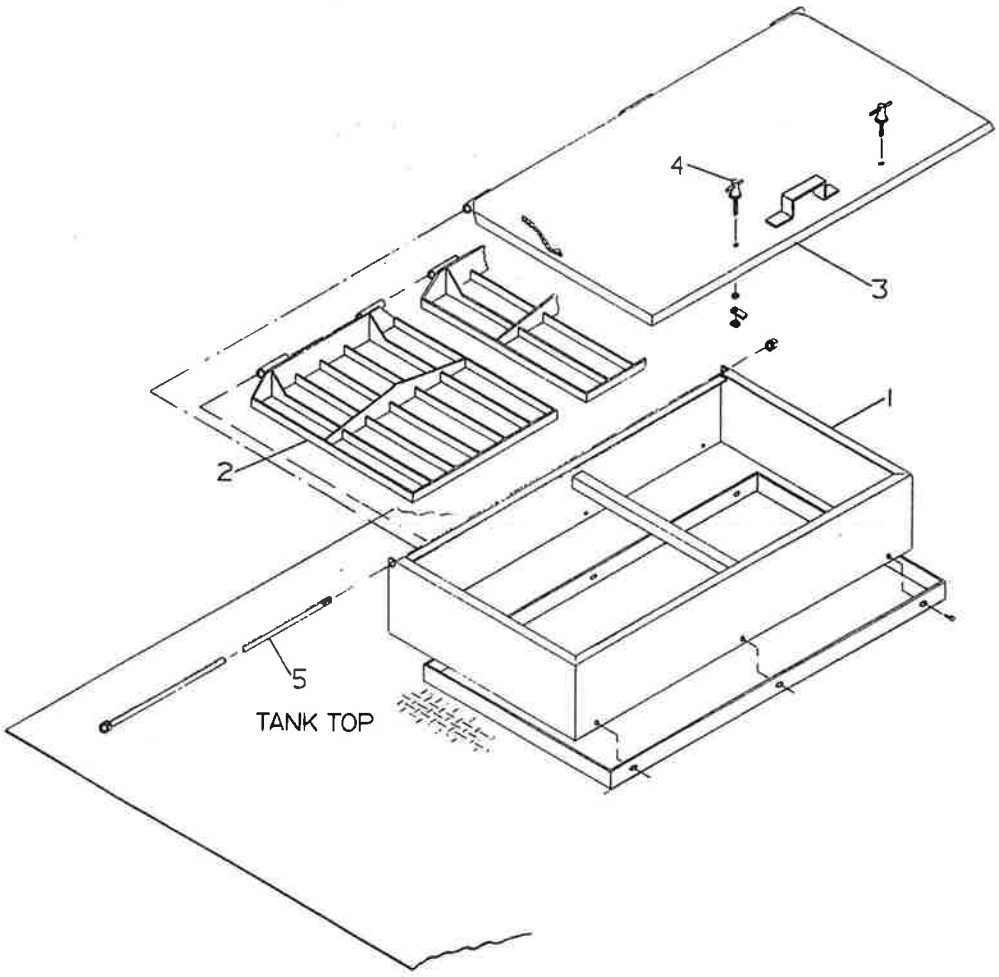

HATCH ASSEMBLY

Ref No.	Part No.	Description	No. Req'd
	011881	Hatch Assembly, Includes:	1
1	008439	Hatch Liner	1
	190044	Gasket	100"
2	011798	Bag Cutter-Grate Assembly	2
3	011802	Hatch Lid	1
	190001	Chain	15"
4	005136	T-Handle Latch	2
5	011798-09	Hinge Rod	1
	Y08L	Locknut	1

WHEN ORDERING PARTS, BE SURE TO STATE SERIAL NUMBER OF MACHINE

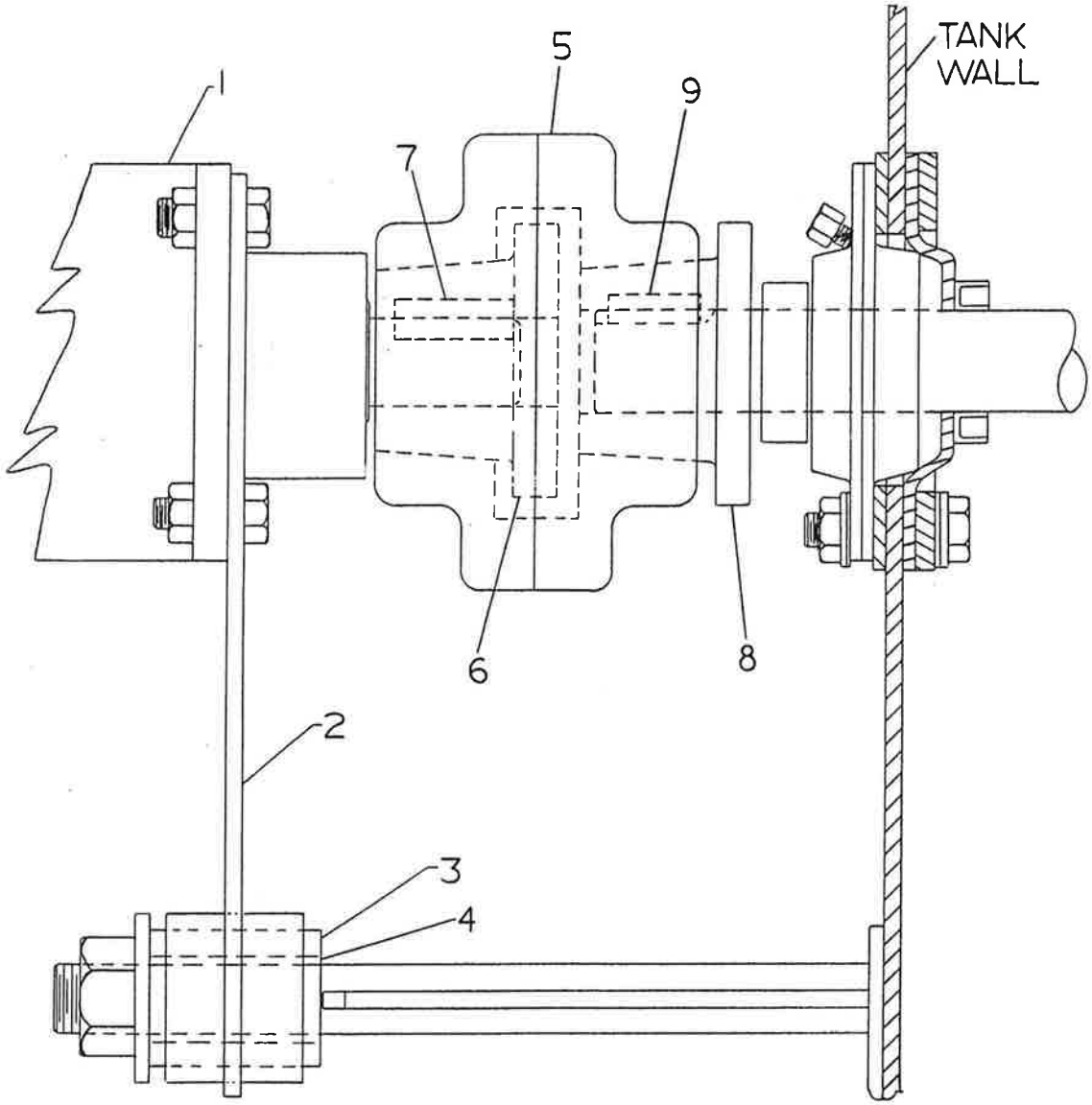

HYDRAULIC AGITATOR DRIVE

REF NO.	PART NO.	DESCRIPTION	NO. REQ'D
1	011859	Hydraulic Motor	1
	X0840	Bolt and Locknut	4
2	011812-01	Hydraulic Motor Mount	1
3	011862	Rubber Bushing	1
4	012522-02	Insert	1
5	012522-04	Coupling	1
6	025228	Bushing, Motor	1
7	023191	Key	1
8	003055B	Bushing, Agitator	1
9	000536	Key	1

WHEN ORDERING PARTS, BE SURE TO STATE SERIAL NUMBER OF MACHINE

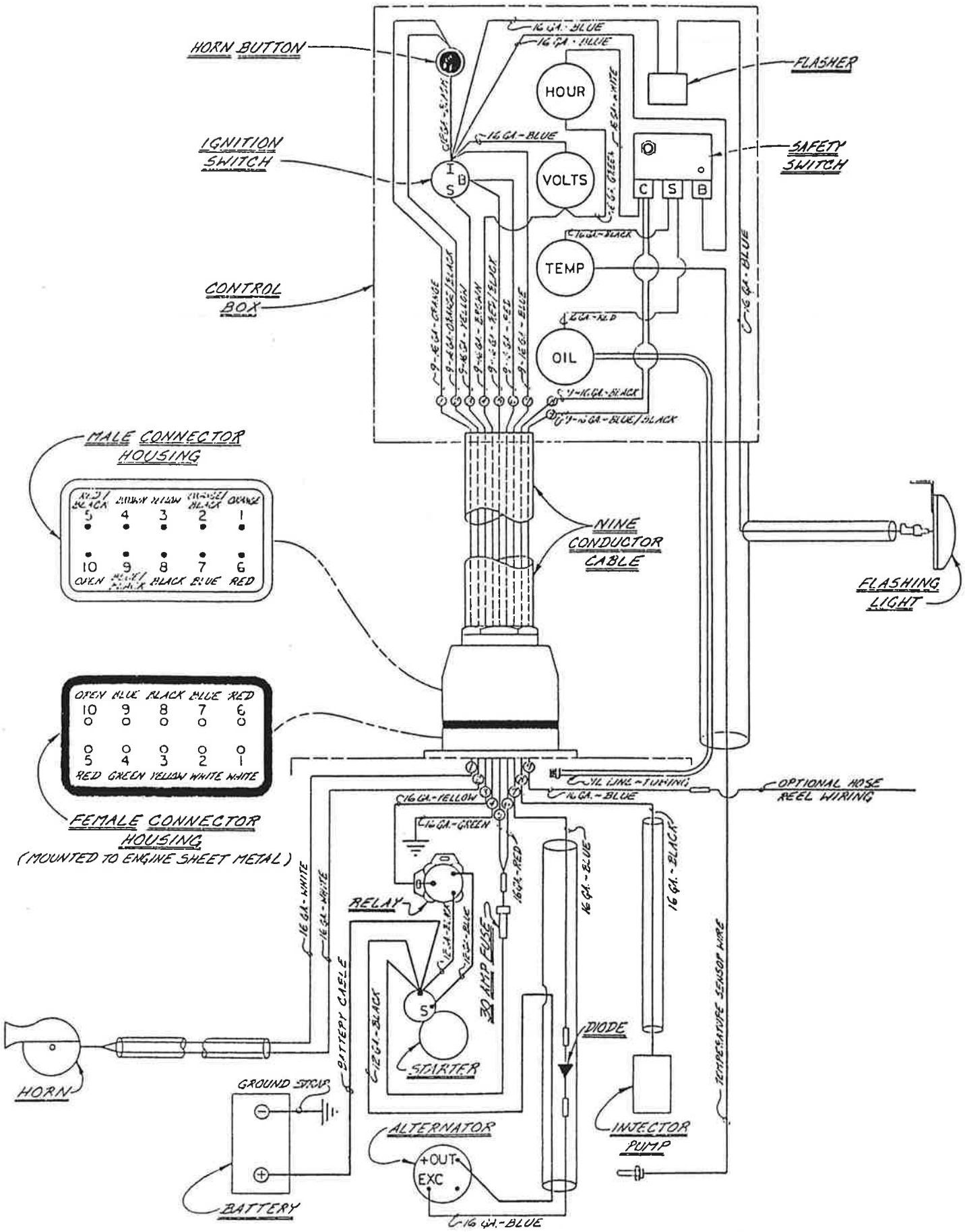
HORN BUTTON
IGNITION SWITCH
CONTROL BOX
FLASHER
SAFETY SWITCH
HOUR
VOLTS
TEMP
OIL
I
S
B
C
S
B
16 GA. - BLUE
16 GA. - BLUE
16 GA. - BLUE
16 GA. - BLACK
16 GA. - RED
16 GA. - BLUE
MALE CONNECTOR HOUSING
5 4 3 2 1
10 9 8 7 6
GREEN BLACK BLUE RED
NINE CONDUCTOR CABLE
FLASHING LIGHT
OPEN BLUE BLACK BLUE RED
10 9 8 7 6
5 4 3 2 1
RED GREEN YELLOW WHITE WHITE
FEMALE CONNECTOR HOUSING
(MOUNTED TO ENGINE SHEET METAL)
OIL LINE - TUBING
16 GA. - BLUE
OPTIONAL HOSE REEL WIRING
16 GA. - YELLOW
16 GA. - GREEN
16 GA. - RED
16 GA. - BLUE
16 GA. - BLACK
16 GA. - WHITE
16 GA. - WHITE
RELAY
30 AMP FUSE
BATTERY CABLE
12 GA. - BLACK
STARTER
DIODE
TEMPERATURE SENSOR WIRE
HORN
GROUND STRAP
ALTERNATOR
+OUT
EXC
INJECTOR PUMP
BATTERY
16 GA. - BLUE

ELECTRICAL SYSTEM

PART NO.	DESCRIPTION	NO. REQ'D
012074	Tower Wiring Harness	1
012073	Engine Wiring Harness	1
012073-01	Horn Wiring Harness (T170 only)	1
012073-02	Horn Wiring Harness (T280 only)	1
012073-03	Horn Wiring Harness (T330 only)	1
020886	Horn Button	1
052076	Ignition Switch	1
022119	Safety Switch	1
021198	Flasher w/Bracket	1
007274	Hourmeter	1
007958	Voltmeter	1
011489	Temperature Gauge	1
007706	Oil Pressure Gauge	1
008473	Oil Pressure Line Kit	1
007336	Flashing Light	1
006499	Horn	1
022425	Diode	1
022891	Relay	1
023511	Alternator/Regulator Assembly	1
011712	Single Groove Pulley (T170 only)	1
011713	Double Groove Pulley (T280/330 only)	1
011851	Battery	1
080220	Battery Box Holddown	1
008171	Battery Cable	1
000241	Ground Cable	1
007091	Engine Ground Strap	1
011770	Battery Box	1

023076 Ignition Key

WHEN ORDERING PARTS, BE SURE TO STATE SERIAL NUMBER OF MACHINE

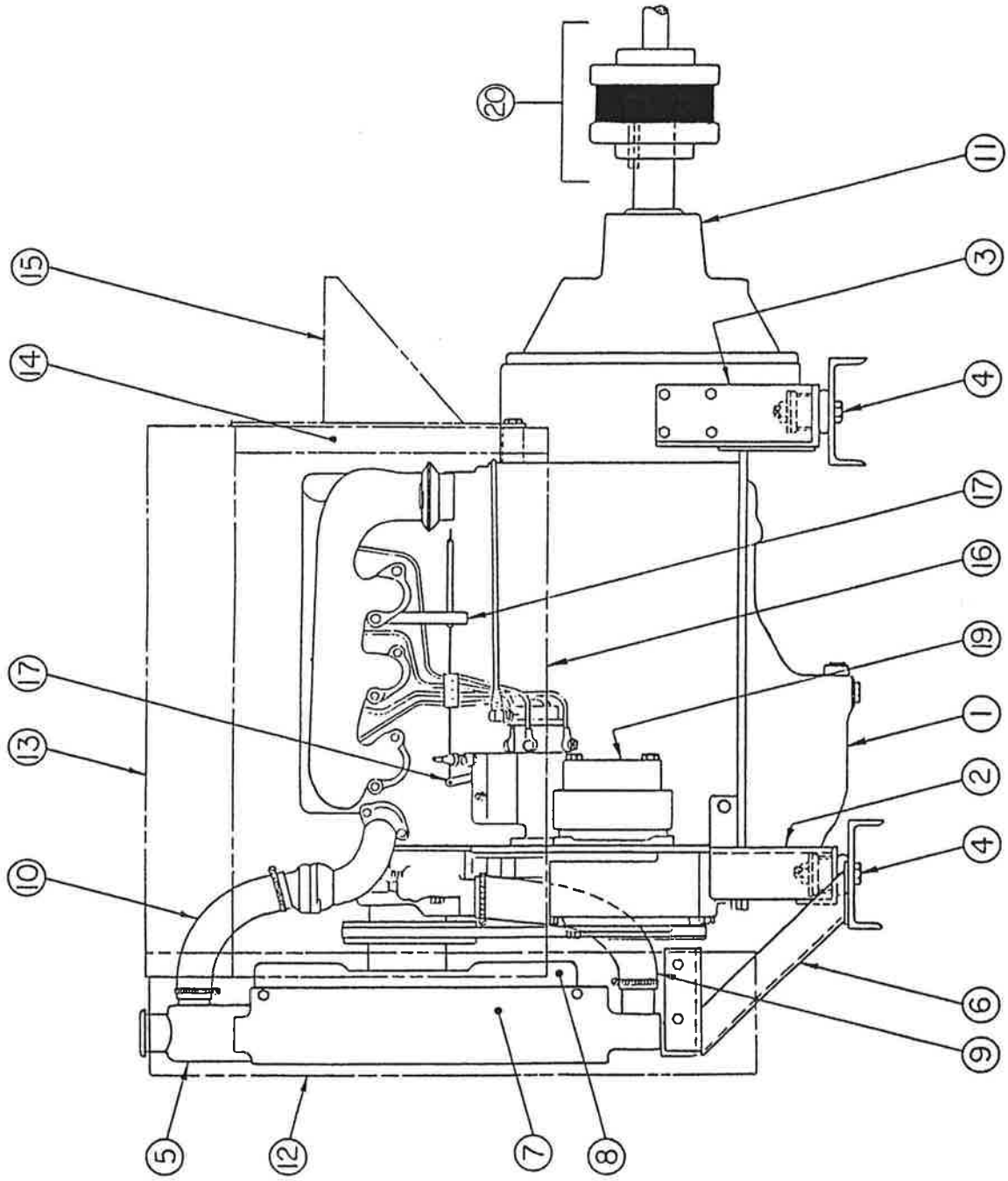

WHEN ORDERING PARTS, BE SURE TO STATE SERIAL NUMBER OF MACHINE

POWER SYSTEM

Ref. No.	Part No.	Description	No. Req'd
1	008462	Engine Assembly:Includes All Part No.'s Marked *	1
2	008460	Front Engine Mount	1
3	011344	Rear Engine Mount	2
4	007433	Shock Mount	4
	007887	Snubbing Washer	4
5	007676	Radiator Assembly	1
	008279	Rubber Mount	2
	022452	Drain Cock	1
	007878*	Radiator Cap	1
	007429	Decal "Drain Water Daily..."	1
6	008458	Radiator Mount	1
7	007677*	Fan Shroud	1
8	007678*	Fan	1
9	008510	Lower Radiator Hose	1
	022450	Clamp	2
10	007679*	Upper Radiator Hose	1
	022450	Clamp	2
11	012069	Clutch Assembly (See page 24 for parts)	1
	022314	Pilot Bearing	1
12	008479	Radiator Cover	1
	011885-02	Spacer	2
	011885-01	Spacer	1
13	008476	Engine Top Cover	1
14	008477	Engine Rear Cover	1
15	023526-01	Rear Cover and Air Cleaner Mntg Bracket	1
	008317	Spacer	2
16	008478	Engine Side Panel	1
17	011307	Throttle Control Mounting Bracket	1
	011670	Spacer	1
18	007724	Pivot, Throttle Cable	1
19	008467	Hydraulic Pump	1
20	011771	Coupling Assembly	1
	011773	Engine Coupling Half	1
	011772	Pump Coupling Half	1
	011774	Coupling Insert	1
	011441	Key, Engine Shaft	1
	190124-32	Keyway Pump Shaft	

NOT ILLUSTRATED

011824	Coupling Guard	1
008451	Fuel Tank	1
011867	Fuel Gauge	1
011889	Brass Adapter	1
007914	Cap, Fuel Tank	1
007907	Filler Neck, Fuel Tank	1
011925	Heat Shield	1
011885-06	Spacer	2

WHEN ORDERING PARTS, BE SURE TO STATE SERIAL NUMBER OF MACHINE

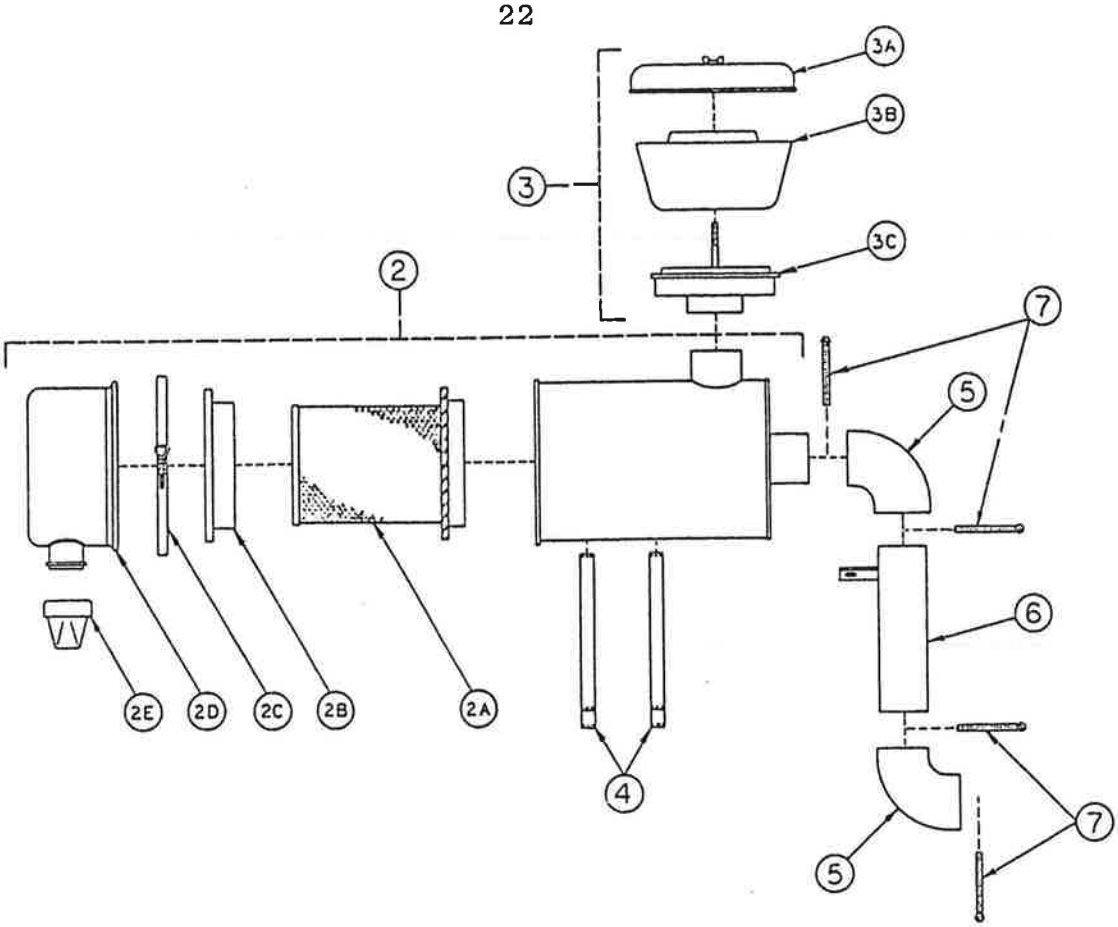

① AIR INTAKE ASSEMBLY

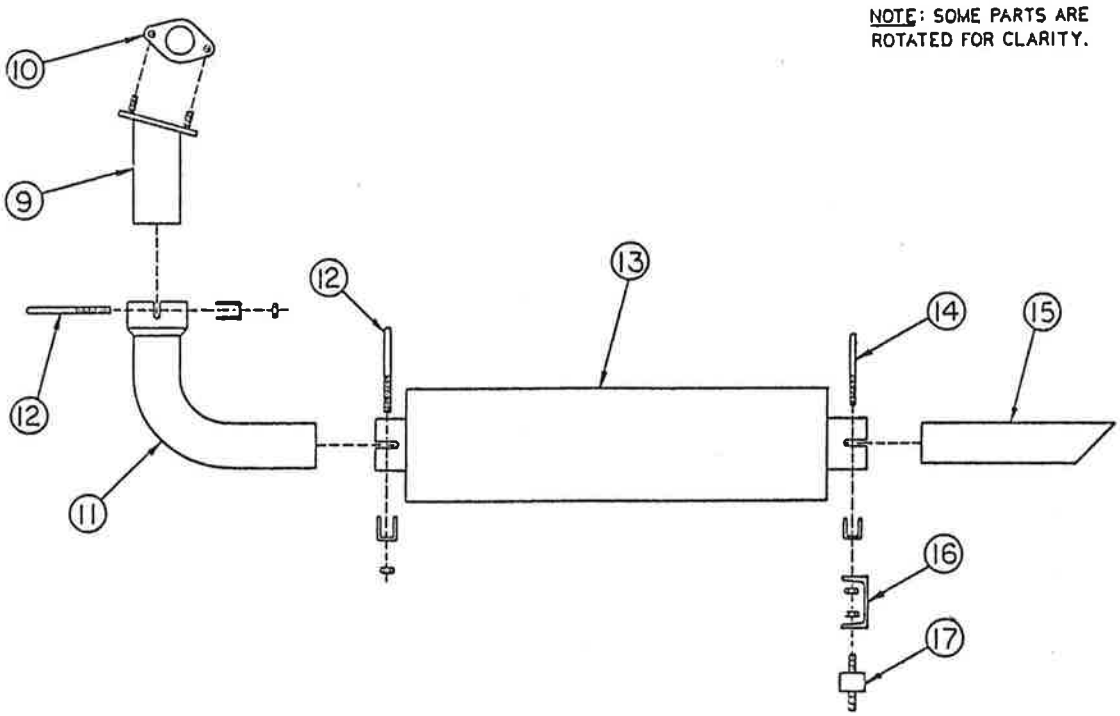

⑧ EXHAUST ASSEMBLY

WHEN ORDERING PARTS, BE SURE TO STATE SERIAL NUMBER OF MACHINE

AIR INTAKE AND EXHAUST ASSEMBLIES

REF NO.	PART NO.	DESCRIPTION	NO.REQ'D
1	008520-01	Air Intake Assembly (includes items 2-7)	1
2	007987	Air Cleaner Assembly	1
2A		007739 Filter Element	1 per
2B		DNP10-2510 Baffle Assembly	1 per
2C		DNP00-2940 Clamp Assembly	1 per
2D		DNP10-3836 Vacuator Cup Assembly	1 per
2E		007994 Vacuator Valve	1 per
3	007988	Pre Cleaner Assembly	1
3A		DNP02-0648 Cover	1 per
3B		DNP02-0227 Bowl	1 per
3C		DNP02-0653 Sleeve	1 per
4	007990	Mounting Band	2
5	007993	Rubber Elbow	2
6	023581-05	Connecting Tube	1
7	022450	Clamp	4
8	008520-02	Exhaust Assembly (includes items 9-17)	1
9	011200	Exhaust Flange	1
10	011218	Flange Gasket	1
11	011211	Exhaust Pipe	1
12	020052	Exhaust Clamp	2
13	007456	Muffler	1
14	000461	Muffler Clamp	1
15	011220	Tail Pipe	1
16	011220-03	Support Channel	1
17	023438	Rubber Mount	1

WHEN ORDERING PARTS, BE SURE TO STATE SERIAL NUMBER OF MACHINE

POWER TAKE-OFF ASSEMBLY

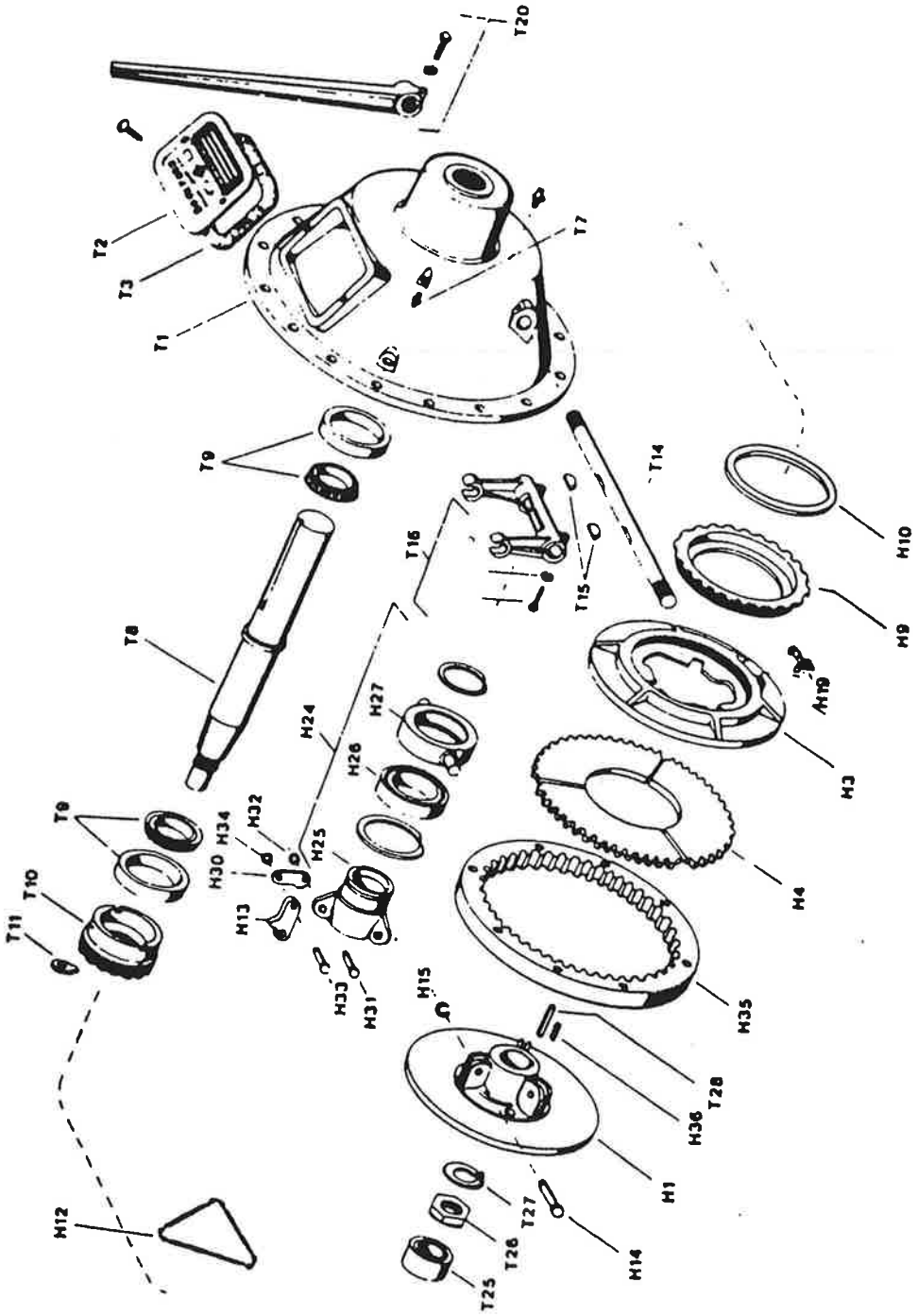

WHEN ORDERING PARTS, BE SURE TO STATE SERIAL NUMBER OF MACHINE

POWER TAKE OFF ASSEMBLY

Ref No.	Part No.	Description	No.Req'd
	012069	Power Take Off	1
		Includes:	
H1	100011	Body, Clutch	1
H3	100028	Pressure Plate	1
H4	100341	Clutch Facing	1
H9	100013	Ring, Adjusting	1
H10	100032	Plate, Ring Wear	1
H12	100026	Spring Lever	1
H13	100018	Lever	3
H14	100010	Pin, Pivot	3
H15	100007	Ring, Re[illegible]	3
H19	100024	Lock, [illegible]	1
H24	100071	Rel[illegible] [illegible], & Bearing Assy	1
H25	100029	[illegible] [illegible]ease	1
H26	100031	[illegible] Release	1
H27	100030	[illegible], Bearing	1
H30	100019	Connecting	6
H31,H33	100009	[illegible]s, Link	6
H32,H34	10000[illegible]	[illegible]ing, Retaining	6
H35	100[illegible]	Ring, Driving	1
H36	[illegible]	Spring, Separator	3
All H's		Clutch Assembly	1
T1	[illegible]	Clutch Housing	1
T2	1[illegible]	Instruction Plate	1
T3	100054	Gasket, Cover	1
T7	100043	Fitting, Lubrication	1
T8	100053	Drive Shaft	1
T9	100052	Bearing Cup & Cone (394A-390)	2
T10	100048	Retainer Bearing	1
T11	100039	Lock, Retainer	1
T14	100040	Shaft, Yoke	1
T15	100305	Key, Woodruff	2
T16	100306	Yoke, Clutch	1
T20	010284	Lever, Shifting	1
T25	022314	Pilot Bearing	1
T26	100307	Nut, Drive Shaft	1
T27	100308	Lock Washer	1
T28	100061	Key, Clutch	1
T31	100224	Lube Fitting, Yoke Shaft	2

Please do not use this page to obtain clutch part numbers.
See the Clutch Addendum Manual

WHEN ORDERING PARTS, BE SURE TO STATE SERIAL NUMBER OF MACHINE

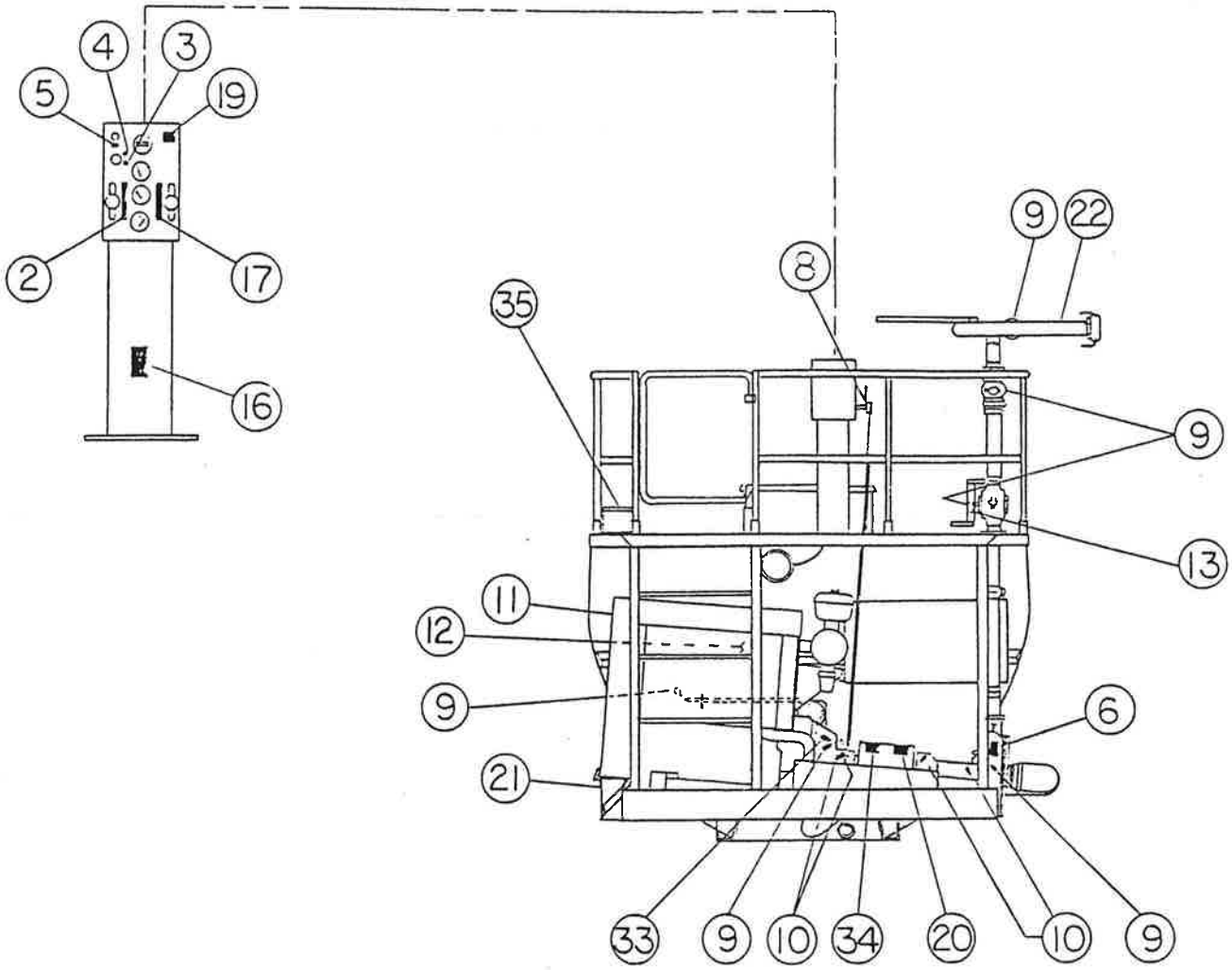

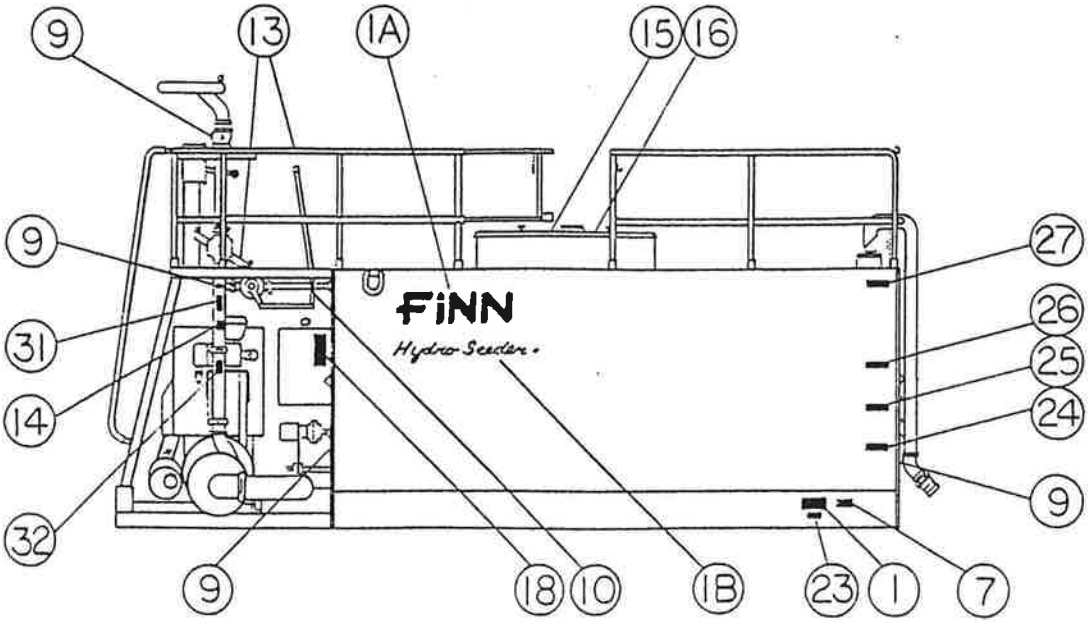

WHEN ORDERING PARTS, BE SURE TO STATE SERIAL NUMBER OF MACHINE

DECALS AND LOCATION

Ref No.	Part No.	Description	No. Req'd
1	023173	Finn Name Plate	1
1A	023174	Decal "Finn"	2
1B	011595	Decal "Hydroseeder"	2
2	007535	Decal "Throttle"	1
3	006870-IGN	Decal "Ignition"	1
4	006870-START	Decal "Start"	1
5	006870-HORN	Decal "Horn"	1
6	006869	Decal "Caution! Pressure Lubricator"	1
7	020976	Decal "Patent Infringement"	1
8	004661	Decal "Clutch Engage"	1
9	007230	Decal "Service Daily"	9
10	007231	Decal "Service Weekly"	4
11	007429	Decal "Radiator Protection"	1
12	007607	Decal "Drain Water Daily"	1
13	012031	Decal "Valve Operation"	2
14	008209	Decal "Danger! Before Loosening"	1
15	008097	Decal "Danger! Before Entering"	1
16	023519	Decal "Caution Wear Eye Protection"	1
17	008286	Decal "Agitator Speed"	1
18	021665	Decal "Hydraulic Insrtuction"	1
19	022082	Decal "Hold Button for 10 Seconds"	1
20	022357	Decal "Caution! Turn Off Engine"	1
21	023391	Decal "Diesel Fuel Only"	1
22	011567	Decal "Danger! Do Not Aim Stream"	1
23	011662	Decal "U.S. Patent Numbers"	1
24	005186	Decal "500 Gallons"	1
25	005187	Decal "800 Gallons"	1
26	005188	Decal "1000 Gallons"	1
27	011790	Decal "1500 Gallons"	1
28	011791	Decal "2000 Gallons" (T-280/330 only)	1
29	011792	Decal "2500 Gallons" (T-280/330 only)	1
30	011793	Decal "3000 Gallons" (T-330 only)	1
31	005216	Decal "Danger! Open Recirculation"	1
32	011569	Decal "Caution! Remote and Hose Reel Only)	1
33	007351	Decal "Use Hand Gun Only"	1
34	031297	Decal "Clutch Operation"	1
35	012041	Decal "Hydroseeder Operation"	1

NOTE: 1 Note: Safety Decals must be purchased as a kit [illegible] Part # 012820

WHEN ORDERING PARTS, BE SURE TO STATE SERIAL NUMBER OF MACHINE

DISCHARGE HOSE EXTENSION

PART NO.	DESCRIPTION	NO.REQ'D
	TOWER TAKE OFF SYSTEM	
007930-02	Hose Assembly, Discahrge Extension-Tower	As Ordered
	007929 1-1/2" Hose, w/Nipples, 50 ft.	1-per
	002191 Adapter	1-per
	160768 Bushing	2-per
	010544 Coupler	1-per
	006513 Gasket	1-per
	PUMP TAKE OFF SYSTEM	
007930-01	Hose Assembly, Discharge Extension-Pump Remote	As Ordered
	007929 1-1/2" Hose w/Nipples, 50 ft.	1-per
	001207 Adapter	1-per
	002158 Coupler	1-per
	006515 Gasket	1-per
011908	Remote Valve Operation-Heavy Duty	1
	007711 Valve, Pump Take-Off	1
	007710 Valve	1
	002158 Coupler	1
	160540 Nipple	1
	007740 Remote Valve Assembly	1
	003242 Valve	1
	003243 Pipe	1
	160309 Nipple	1
	160763 Bushing	1
	006102 Coupler	1
	001207 Adapter	1
	006621 Nozzle Asembly, Wide Ribbon	1
	006604 Nozzle, Wide Ribbon	1
	006096 Adapter	1
	160761 Bushing	1
	006622 Nozzle Asembly, Narrow Ribbon	1
	006605 Nozzle, Narrow Ribbon	1
	006096 Adapter	1
	160761 Bushing	1

WHEN ORDERING PARTS, BE SURE TO STATE SERIAL NUMBER OF MACHINE

RECOMMENDED SPARE PARTS, REPAIR KITS AND MISCELLANEOUS PARTS

Recommended spare parts are available to avoid unnecessary down time. Repair kits are available to recondition parts which periodically need service.

Part No.	Description	No. Req'd
011919	Seal, Suction Pipe	1
008472	Seal, Reducer Suction Elbow	1
002820	Seal, Discharge Pipe	1
006722	Seal, Recirculation Pipe	1
006513	Gasket, Nozzle Coupler	2
007469	Lubricant, Recirculation & Discharge Valves	4
007739	Element, Air Cleaner	1
JDT24473	Belt, Fan	1
JDRE58367	Filter, Fuel	1
JDT19044	Filter, Oil	1
031245	Snapper Pin-Boom Holddown	1
	REPAIR KITS	
011917	Swivel Repair Kits	
005295	Pump Seal Kit Consisting of:	
	005150 O Ring	1
	006443 Seal Assembly	1
	006444 Grease Retainer	1
	006447 Grease Seal	2
023120	Hydraulic Valve Seal Kit	
011973	Hydraulic Motor Seal Kit	
008512	Hydraulic Pump Seal Kit	
	MISCELLANEOUS PARTS	
002190	Cap. Tank Drain	1
002191	Coupling, Tank Drain	1
002290	Rear Marker Light	2
011666	Exterior Finish Paint-Neutral	
011667	Exterior Primer Paint	
011900	Interior Finish Paint	
011925	Heat Shield	1
190018	Safety Walk on Ladder	As Req'd
000698	Grease, Automatic Lubricator	

WHEN ORDERING PARTS, BE SURE TO STATE SERIAL NUMBER OF MACHINE

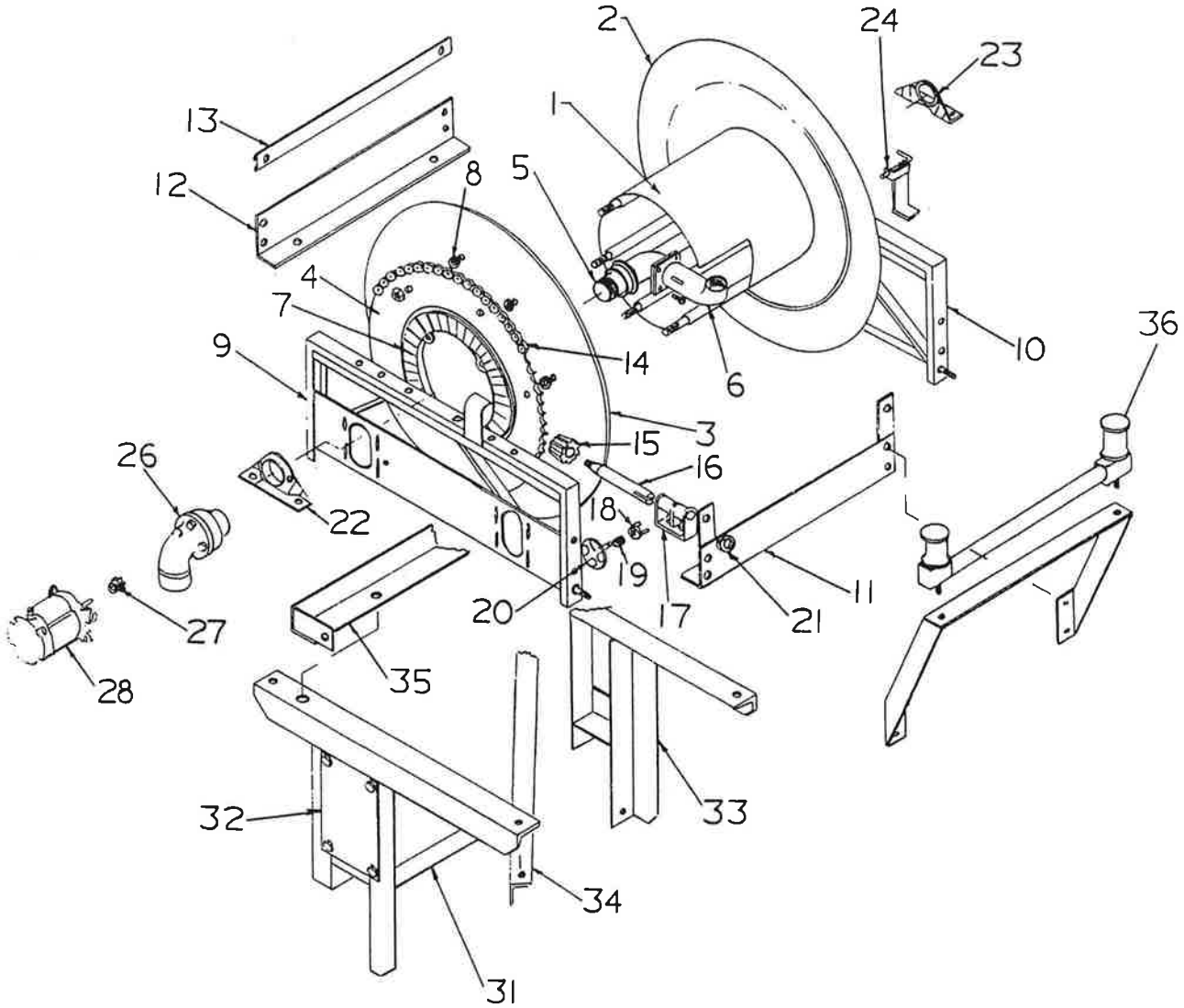

WHEN ORDERING PARTS, BE SURE TO STATE SERIAL NUMBER OF MACHINE

HOSE REEL ASSEMBLY

REF NO.	PART NO.	DESCRIPTION	NO.REQ'D
	008212	Hose Reel Assembly, Includes:	1
1		Drum	1
2		Back Disc	1
3		Front Disc	1
4	012235	Disc Sprocket	1
5		Hub, Less Riser	1
6		Flanged Riser	1
7	008144	Ring Gear	1
8		Spacer	6
9		Front Frame	1
10		Back Frame	1
11		Front Foot	1
12		Back Foot	1
13		Back Brace	1
14	008200	Chain w/Connecting Link	1
15		Pinion Gear	1
16		Pinion Shaft	1
17		Side Bearing	1
18	008111	Brake Pad	1
19	008112	Brake Spring	1
20	008109	Brake Wheel	1
21		Pinion Shaft-Collar & Set Screw	1
22	008314	Drive Side Bearing	1
23	008313	Idle Side Bearing	1
24	008433	Pin Lock Assembly W/Brackets	1
26	008210	Swivel Joint	1
27	008199	Chain Sprocket- 11 tooth	1
28	008188	Explosion Proof Motor	1
31	011893-01	Left Mounting Frame	1
32	011915-01	Control Panel w/o Switches	1
33	011893-02	Right Mounting Frame	1
34	011892-08	Cross Angle	1
35	011893-03	Top Connecting Angle	1
36	011894	Hose Rewind Guide (Optional)	1
	011916	Lead-In-Hose	1
	001207	Adapter	1
	011955	Wiring Harness	1
	011955-01	Panel w/Switches	1
	008420	Circuit Breaker	1
	020886	Button, Rewind	1
	008450	Solenoid	1

WHEN ORDERING PARTS, BE SURE TO STATE SERIAL NUMBER OF MACHINE