FINN CORPORATION

FINN TL 30

OPERATOR'S MANUAL

MODEL ___R0___ SERIAL NO. _____

SAFETY FIRST

With any piece of equipment, new or used, the most important part of its operation is SAFETY!

Finn Corporation encourages you and your employees to familiarize yourselves with your new equipment and to stress safe operation.

This symbol is used throughout this manual to call attention to safe procedures.

– Pay Attention –

FINN CORPORATION

INDEX

Operation and Maintenance Manual

For

TL-30 HydroSeeders

This manual gives step by step instructions for the operation and maintenance of the Finn HydroSeeder. For best results and to insure longer life of the equipment, please follow the instructions carefully.

DEFINITION OF HYDROSEEDING: Hydroseeding is the process whereby seed, fertilizer and/or lime and wood fiber mulch (using water as a carrying medium) are applied on the soil for the purpose of establishing turf.

THE FINN HYDROSEEDER AND HOW IT WORKS: The Finn HydroSeeder will apply seed, fertilizer, and/or lime, wood fiber mulch, or stabilizing materials in any prescribed or desired combination. These materials, plus water, are loaded into the SLURRY TANK through the LOADING HATCH, and are mixed and kept in a constant state of suspension by SLURRY RECIRCULATION and MECHANICAL AGITATION. The MECHANICAL AGITATOR is driven by a HYDRAULIC MOTOR which is mounted on the engine end of the AGITATOR SHAFT. The hydraulic motor speed and direction is controlled by the lever on the HYDRAULIC CONTROL VALVE. Oil is pumped to the valve and motor by a HYDRAULIC PUMP, belt driven on the back of the engine. The SLURRY PUMP pulls mixed material out of the slurry tank and pumps it through the RECIRCULATION LINE back into the slurry tank. The slurry pump also pumps the material through the DISCHARGE HOSE where it is directed onto the seedbed by the operator. This equipment is designed to accomplish hydroseeding in one thorough operation utilizing minimum manpower.

OPTIONAL ATTACHMENTS

1. Extension Hoses: Extension hoses are available in 50 ft. (15 m) and 100 ft. (30 m) lengths, up to a total of 150 ft. (45 m). Hose of a greater length may adversely affect the discharge distance, and discharge time of the HydroSeeder. All connections are camlock quick operating fittings, including the connection to the end of the discharge piping. A nozzle is connected to the end of the hose next to the remote discharge valve. Once the hose is connected, the HydroSeeder is ready to operate. Flow though the hose and nozzle is controlled by the remote discharge valve. When using this valve, the recirculation valve on the Hydroseeder MUST BE OPEN to allow flow at times when the remote valve is closed.

2. FILLING PUMPS with capacities of 5,500 GPH (19,000 liters/hour) or 9,000 GPH (34,000 liters/hour) are available.

CARRIER VEHICLE

This skid type HydroSeeder is to be mounted onto a truck or trailer which can carry a payload of at least 3900 pounds (1700 kg). This is the weight of the fully loaded HydroSeeder. Any auxillary loads due to material storage or optional equipment, as well as the weight of the carrier vehicle, must be added to obtain the proper carrier vehicle capacity.

Carrier Vehicle Requirements

HYDROSEEDER		TRUCK REQUIREMENTS
Type	Maximum Weight (loaded)	
T-30	3900 lbs. (1770 kg)	Carrier vehicle must be able to support 3900 lbs. (1770 kg) in addition to its own weight.

DANGER! This HydroSeeder should be mounted by a qualified truck body installer or by someone expert in the anchoring of such equipment to trailers.

PRE-START CHECK

1. Check HydroSeeder mountings to carrier vehicle
2. Safety guards in place and secure.

EQUIPMENT CHECK

CAUTION - Equipment check is made with the engine off and all rotating parts stopped.

1. See that tool kit contains all prescribed items (see tool kit list in parts book).
2. Discharge Hose Assembly
   A. Remove from traveling position.
   B. Check and clean nozzle and hose of obstructions.
   C. Place male end of the hose assembly in the coupler at the end of the discharge pipe assembly.
3. Open recirculation valve.
4. Check engine oil and fuel...for oil refer to the engine manual.
5. Inspect air cleaner for dust and dirt, clean if necessary (see engine manual).
6. Inspect the "slurry-tank" for foreign objects.
7. Check all slurry valves for free movement.
8. Secure the drain plug on the outside -- bottom of the slurry-tank.
9. Check to be certain pump drain plug is in place.
10. Check the hydraulic oil level. Add oil (46AW) if none is visible in the glass window on the hydraulic reservoir.

11. Lubricate Equipment - use hand gun only.

   A. Each lubrication point is marked.

   B. Check automatic pressure lubricator. If the stem is fully extended with thumb nut all the way up then pressure lubricator contains lubricant - if not, lubricant must be replaced by the following procedure:

      a) Turn thumb nut clockwise until stem rises to maximum height.

      b) Remove cap and fill cap with soda base grease.

      c) Replace cap.

      d) Turn thumb nut counter-clockwise until the thumb nut is at the top of the stem. The spring and pressure disc in the lubricator forces the grease, under pressure, to the pump seal.
      IMPORTANT: When the thumb nut has moved down to within 1/2" (1.25 cm) of touching the cap -- reservice the automatic lubricator.

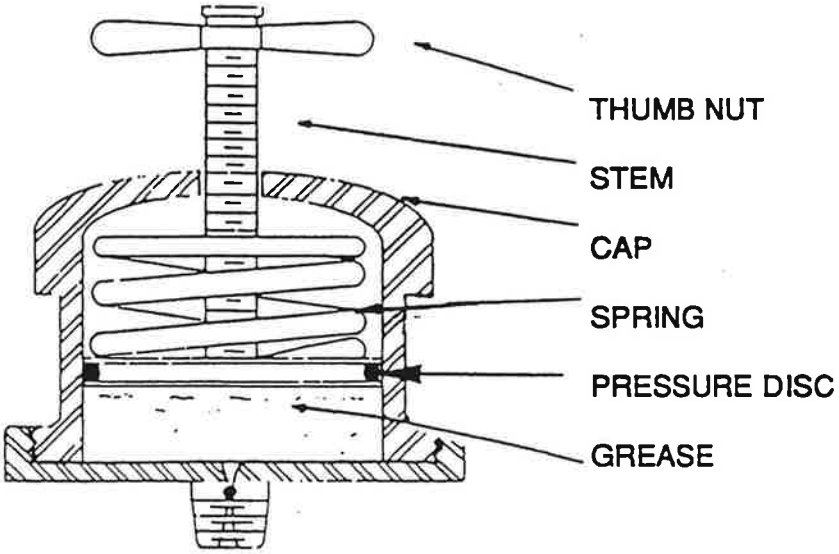

12. Check the hydraulic belt for proper tension.

DISCHARGE AND RECIRCULATION VALVE OPERATION

This Hydroseeder is equipped with two (2) independently operated ball valves to control slurry flow (see fig. 1). The first valve is the recirculation valve. An open recirculation valve allows flow back into the tank. The second valve is the pump discharge valve. An open pump discharge valve allows slurry flow to the discharge hose. An optional third valve, a remote valve, can be added at the end of the discharge hose. An open remote valve allows discharge of the slurry onto the area being treated.

DANGER! Never start the engine when the recirculation valve and either the pump discharge or remote valve is closed. Pump is running with slurry flow closed-off which will result in extreme heat generation causing damage and/ or bodily injury. The recirculation valve must always be open and material flowing back into the tank when using the remote valve. A closed remote valve in conjunction with a closed or plugged recirculation will cause extreme heat resulting in damage and/or bodily injury.

Fig. #1

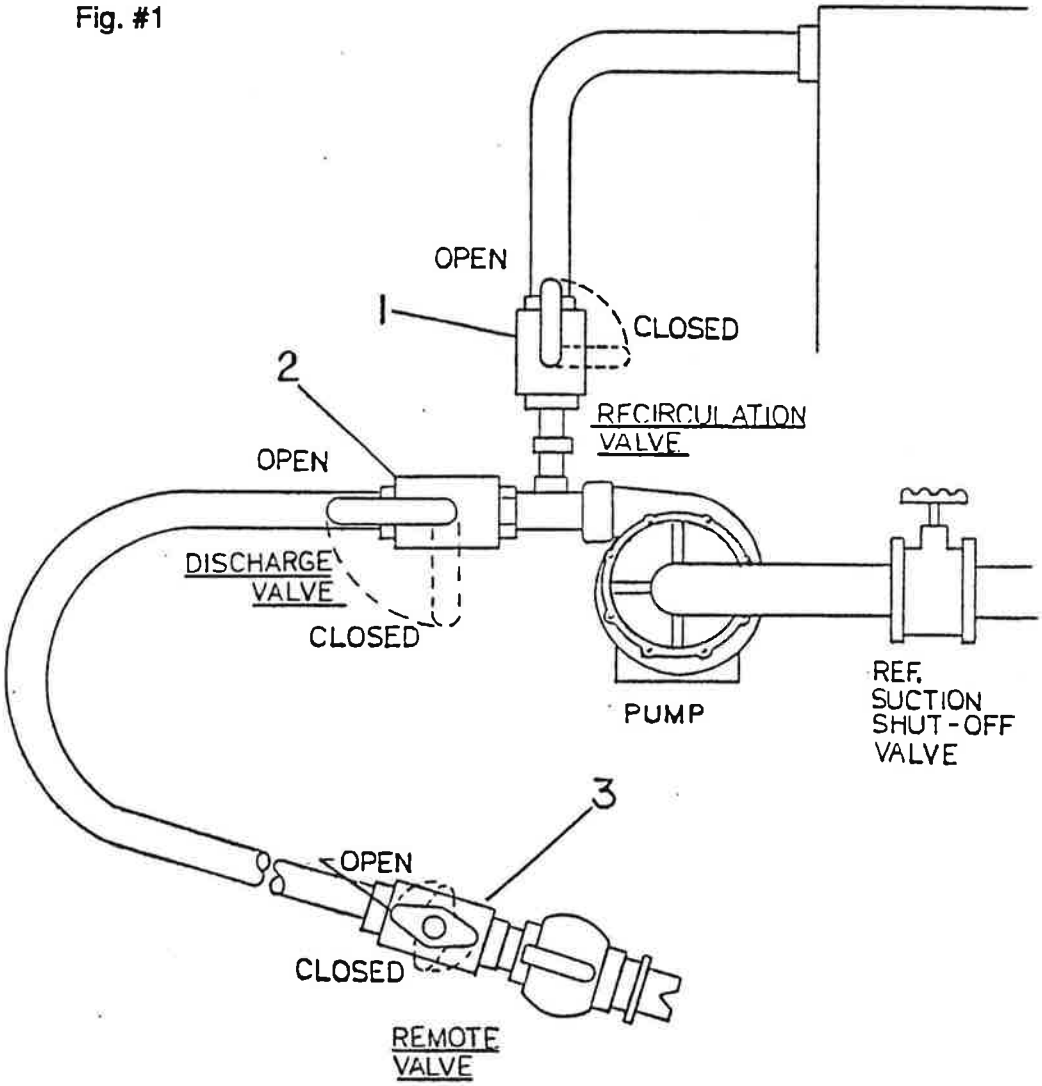

STARTING PROCEDURE

Before starting, turn the recirculation valve on, the pump discharge valve off, and place the agitator control in the neutral position.

1. Set throttle approximately 1/4 open. Pull choke knob out.
2. Flip the toggle type ignition switch to the "on" position.
3. Depress the starter button until the engine fires. Push the choke in for even running. Allow the engine to warm up for 3 to 5 minutes.

NOTE: This engine is equipped with a safety system which will shut the engine off if the engine oil pressure falls below 7 psi.

PRIOR TO LOADING

Before placing any dry material into the slurry-tank, the tank must be filled to the required capacity with water. The following tables of capacities should be used. Fill tank with water from any stream or pond with the filling pump attachment. Other sources of water:

A. Any pressure source, eg. fire hydrant (if water main is used, be sure to put a check valve in the line to prevent material from flowing back into the water main, and obtain a permit from the local water company).

B. Tank-truck.

MATERIAL - CAPACITY - PERFORMANCE

Table #1 using Dry Material, without wood fiber mulch:

HydroSeeder	Maximum Water Cap	Material Type	Maximum Material Cap	Discharge Time (Minutes)	Maximum Acreage
TL-30	300 gals. (1136 1)	Seed/ Fertilizer/ Lime	500 lbs (227 kg)	8	0.7 (.29 ha)

Table #2 With Wood Fiber Mulch

HydroSeeder	Water	Wood Fiber Mulch	* Dry Material Capacity (Do not mix lime with wood fiber mulch in HS)	Discharge Time (Minutes)	Maximum Acreage
TL-30	250 gals. (946 1)	100 lbs (50 kg)	For 1/14 acre (0.25 ha)	8	1/14 (0.25 ha)

*Necessary seed and/or fertilizer for the area which the load is to cover – Example: enough seed and fertilizer for 1/14 acre (0.25 ha), together with 110 lbs. (50 kg) of wood fiber mulch for the TL-30 HydroSeeder. Based on 1500 lbs. of mulch per acre (1680 kg/ha).

PRIOR TO APPLICATION

1. Crew Chief should familiarize self with area to be seeded and develop a plan to insure uniform application.

DISCHARGE NOZZLES

Two nozzles, a ribbon nozzle and a long distance nozzle are available with the HydroSeeder. The narrow ribbon nozzle has a reach of up to 35 feet (10.7 meters) with a 15 feet (4.6 meters) wide spray pattern. The long distance nozzle has a reach of up to 60 feet (19meters). The ribbon nozzle has a discharge time of 8 minutes and the long distance nozzle a discharge time of 8 minutes. All the nozzles are stored in the tool kit.

LOADING - (For new machine or new crew)

1. Fill slurry-tank to required capacity of water.
2. Start engine (see starting procedure on Page5).
3. Start agitator - about 3/4 speed, reverse.
4. Open throttle to full RPM (Engine 3400 RPM).
5. Check all lines and fittings for leaks.
6. With the recirculation valve open, and the pump discharge valve closed, engage clutch.
7. Check to see if the recirculation system is functioning. When functioning properly, a stream of water will be pouring back into the slurry-tank from the recirculation pipe.
8. Choose a nozzle, place it in the end of the discharge hose, and aim the nozzle on the discharge hose away from any persons or obstruction. Open the pump discharge valve.
9. Open the remote discharge valve and check to determine if the water is pumped out in a uniform spray pattern. If the desired pattern is not achieved, close the remote discharge valve, remove the nozzle, and remove the obstruction. (See Note)
10. Disengage clutch. Close pump discharge valve.
11. When loading the dry material - load the lightest material first. Agitator must be running at least 3/4 speed, reverse.
    A. Seed - cut the seed bag and dump contents into the slurry-tank. (When using inocculant, dump it in the tank along with the seed).
    B. Wood Fiber Mulch - 1/2 bag at a time.
    C. Fertilizer - cut the fertilizer bag and dump contents into the slurry-tank.

CAUTION: Take care not to lose pens, lighters, etc. from shirt pockets nor pieces of paper or plastic bags, as these might plug the pump.

IMPORTANT: Once operator is thoroughly familiar with the loading procedure, loading time can be reduced by beginning the material loading process as soon as the paddles in the slurry-tank are covered with water.

12. When using wood fiber mulch, mix for several minutes before discharging. (When seed, fertilizer, and/or lime only are used there is no waiting period).
13. When using oats or other quick swelling seeds, load these just prior to application.
14. When equipment is loaded with dry material and thoroughly mixed, the throttle should be reduced to 2/3 if application is not to start immediately. If wood fiber mulch is used at the normal recommended rate, the machine may be turned off until ready to discharge.
15. Under no circumstances should the slurry be agitated for more than 15 minutes prior to discharging to cut down on wear and keep seed from swelling.
16. Close the lid of the slurry-tank on top of the loading platform.

NOTE: To avoid plugging on the initial load of the day, always pre-wet the hose in this manner before loading.

APPLICATION OF SLURRY

DANGER: Do not spray toward powerlines, transformers or other high voltage conductors.

1. Move the agitator control to the forward position so that the agitator is turning from 2/3 to full speed.
2. With the recirculation valve open and both discharge valves closed, engage the clutch. Check that the recirculation is functioning (See #7 on the previous page).
3. With a firm grip on the end of the discharge hose, open the pump discharge valve.
4. Application of slurry can now begin, controlling the slurry flow by use of the remote discharge valve.* With a firm grip on the end of the discharge hose, open the remote discharge valve. If using a ribbon nozzle with wood fiber, aim the stream into the ground to create a surface with small poc marks. If using the long range nozzle, elevate the stream approximately 10 degrees above the seeding area, and allow the slurry to gently rain onto the seed bed.
5. Starting at the farthest point from the HydroSeeder, move the nozzle from side to side with a steady motion, distributing the slurry onto the seed bed evenly. Work back to the HydroSeeder, taking up hose as you go.
6. When the tank is empty, close the remote discharge valve, disengage the clutch, and move the throttle to the idle position.
7. Close the recirculation valve and the pump discharge valve.

RE-LOADING PROCEDURE

1. Begin filling the tank with water. If the HydroSeeder must be moved to get water, carry the hose on top of the HydroSeeder, or if using a hose reel, reel in the hose.
2. Clean out the system (Especially when using wood fiber.)
   - A. Fill the tank to cover the agitator paddles.
   - B. Start the engine, and advance the engine RPM's to 3/4 throttle.
   - C. Set the agitator speed, about 3/4 speed reverse.
   - D. Remove the discharge hose from the coupler on the pump discharge valve. Open the pump discharge valve and engage the clutch until the discharge is clear.
   - E. Disengage the clutch, close the pump discharge valve, and open the recirculation valve.
   - F. Engage the clutch and recirculate until the stream is clear. The recirculation may plug at the nozzle. If it does, disengage the clutch, stop the engine, remove the recirculation valve assembly, and remove the obstruction. Reassemble, start engine, engage clutch, and clear the discharge hose.
   - G. Make sure water is still being recirculated through the recirculation pipe at the hatch.
   - H. Disengage clutch.
   - I. Proceed to add material. DON'T FORGET THE SEED!

* DANGER!! **Recirculation valve must be open and material flowing back into tank when using a remote valve. A closed or plugged recirculation line will cause extreme heat resulting in damage and/or bodily injury.**

AFTER THE FIRST 4 HOURS OF OPERATION

1. Check and tighten belts.

CLEANING AND MAINTENANCE

DAILY

1. Cleaning the HydroSeeder
   A. Fill the slurry-tank with 100 gallons of water (375 l).
   B. Remove the discharge hose from the coupler on the pump discharge valve. Open the pump discharge valve until the discharge is clear.
   C. Disengage the clutch, install the discharge hose and clean out the hose by opening the remote discharge valve and engaging the clutch.
   D. When hose is clear, close the pump discharge valve. Allow recirculation to take place for approximately two minutes.
   E. Stop the engine and remove the drain plug on the rear of the slurry-tank and allow tank to drain.
   F. Wash the outside of the HydroSeeder to remove any corrosive agents.
   G. If lime is being used, spray diesel fuel over the entire machine. This will dissolve the lime and prohibit buildup.
   IMPORTANT: In freezing weather, remove the discharge assembly and pour one quart of anti-freeze into the opening to replace the water in the pump, or remove the drain plug in the pump casing. Also drain all water from the discharge hose. Store machine with all slurry valves open.
   H. When shutting off the machine, always insure that electric clutch is switched to "DISENGAGED" position. (Leaving switch in "ENGAGED" position will drain battery).

2. Lubricating the HydroSeeder (use hand gun only)
   IMPORTANT: Lubrication should be performed IMMEDIATELY AFTER cleaning of equipment.
   A. Lubricate the two agitator shaft bearings located on the outside front and rear of the slurry-tank.
   B. Service the automatic lubricator on the pump as needed.
   (For servicing see Page 3.)
   C. Check the engine oil and replenish when necessary.
   D. Check the air filter for dirt and clean as required.
   F. Check the hydraulic oil and replenish when necessary.

WEEKLY or every 50 hours of operating time.

1. Change the oil in the crank case with the grade oil specified by the engine manufacturer.
   IMPORTANT: Install a new oil filter every 100 hours.
2. Clean the air cleaner following instructions in engine manual.
3. Lubricate all points on the HydroSeeder as outlined in the daily maintenance section and in addition, lubricate the two grease fittings on the pump bearings.
4. Inspect the slurry-tank for build-up of residue in the sump area and clear if necessary.

SEASONAL and winter storage maintenance.

1. Drain the slurry-tank of all water prior to storage and leave the drainage plug disconnected.
2. Pour one quart of oil or kerosene into the pump housing through discharge pipe and spin pump to prevent rust in the pump. Remove drain plug.
3. Chip and steel brush any rust spots and touch up with paint.
4. Lubricate all fittings, and the pump seal.
5. Lubricate equipment again just prior to starting operation after storage.
6. Change hydraulic oil and oil filter every 400 hours, or if the oil becomes milky or has a burnt odor.

SLURRY PUMP

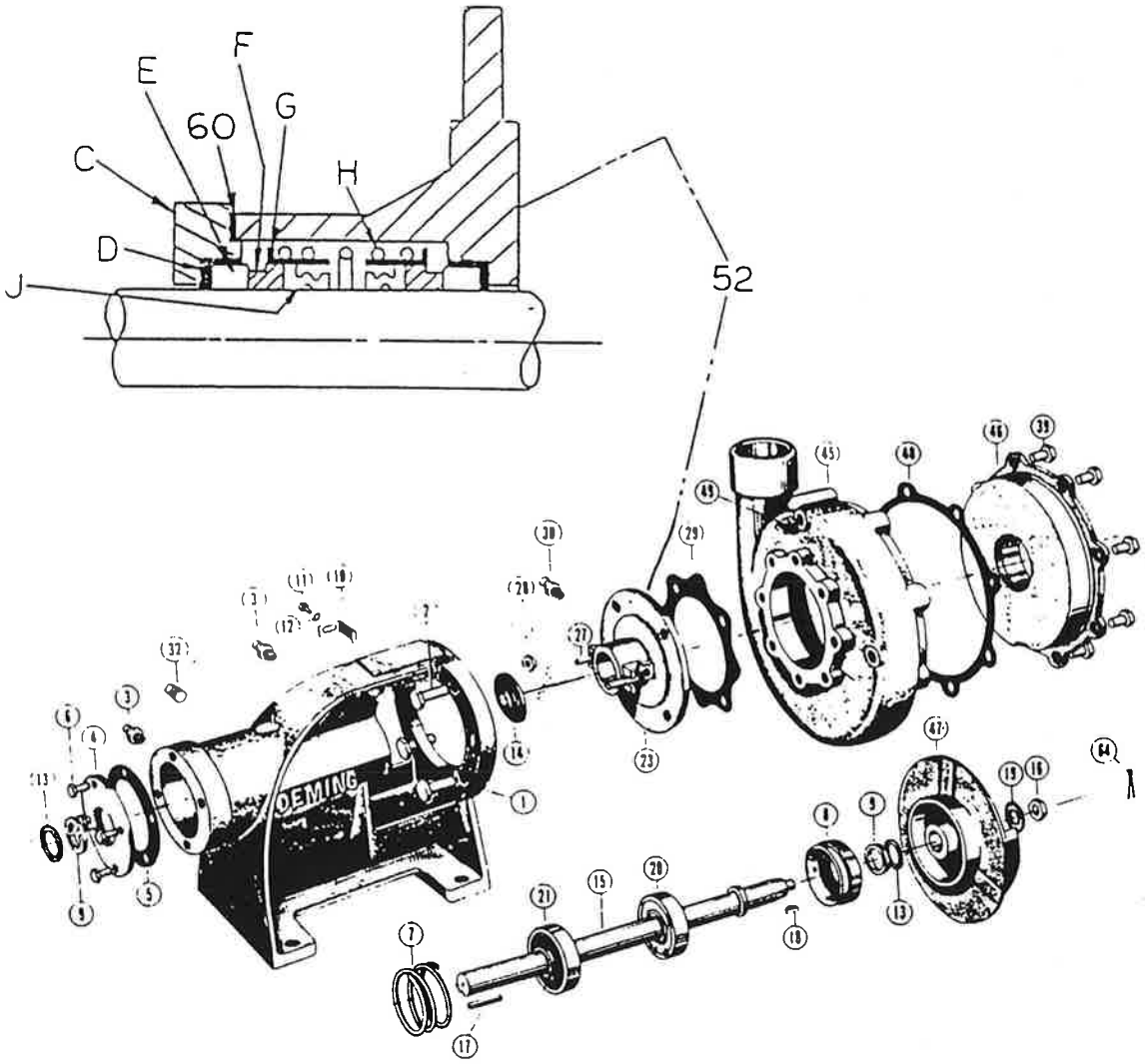

NO.	PART
1.	Support Head
2.	Cap Screws (Casing)
3.	Grease Fittings
4.	Bearing Cover
5.	Gasket (Bearing Cover)
6.	Cap Screws(Bearing Cover)
7.	Bearing Adjusting Spring
8.	Bearing Adjusting Nut
9.	Felt Ring
10.	Adjusting Nut Clip
11.	Cap Screws (Adjusting Nut Clip)
12.	Lock Washer (Adjusting Nut Clip)
13.	Clamping Ring
14.	Slinger
15.	Shaft
16.	Castellated Nut
17.	Shaft Key, Square
18.	Impeller Key, Woodruff
19.	Impeller Washer
20.	Ball Bearing (Seal Head End)
21.	Ball Bearing (Coupling End)
27.	Bolts
28.	Nuts
29.	Gasket (Seal Head)
32.	Pipe Plug
39	Cap Screws (Suction Head)
45.	Casing
46.	Suction Head
47.	Impeller
48.	Gasket Suction Head
49.	Pipe Plugs (Liquid End)
52.	Seal Head
60.	Gasket (Seal Gland)
C.	Seal Gland
D.	Seat Gasket
E.	Floating Seat
F.	Seal Face Carbon
G.	Retainer
H.	Spring
J.	Bellows
61.	Spacer
64.	Cotter Pin

Fig. #3

PUMP MAINTENANCE (Ref. - Fig. #3)

CAUTION: **Pump maintenance to be done only while engine is not running.**

A. FACTORY-TOLERANCES

1. To check pump tolerances loosen the two clamps on the pump suction piping and remove the inlet elbow. Through the pump suction hole, insert a feeler gauge between the pump impeller (47) and the suction cover (46). This measurement on a new pump is between .010 - .015 of an inch (25-40 mm).

B. IMPELLER CLEARANCE - To bring the pump back to proper tolerance proceed as follows:

1. Loosen adjusting nut clip (10) by unscrewing cap screw (11) then turn bearing adjusting nut (8) counter-clockwise to allow the impeller (47) to just touch the suction head face (46). It may be necessary to bump the shaft (15) on coupling end to make sure the bearing (2) is against the bearing adjusting nut (8). Then back off the impeller slightly by tightening the bearing adjusting nut in a clockwise direction. Rotate the shaft by hand to make certain that the impeller does not rub against the suction head face. Check the impeller to suction cover clearance with a feeler gauge. Once the proper clearance (.010 - .015 inch) has been attained, lock the bearing adjusting nut in place with the bearing adjusting nut clip (10) and cap screw (11).

C. FOR INSPECTION AND REPAIR OF LIQUID END

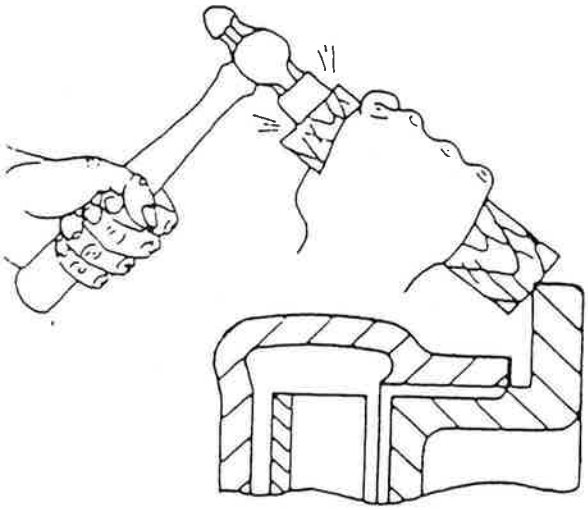

1. Remove suction head cap screws (39) then set a block of wood against the finished flange or back of the suction head (46) and tap block lightly with a hammer to loosen suction head. Remove suction head from pump and place suction head gasket (48) in a bucket of water to keep it soft and pliable.

2. Bend and remove cotter pin (64) in castellated nut (16).

3. Unscrew the castellated nut (16) by turning counter-clockwise while holding shaft with a wrench at drive coupling. Then slide the impeller washer (19) off the shaft.

4. To remove the impeller (47) from the shaft, make 3 special cap screws - 3/8" x 16 NC with thread cut 1 3/4" long. Screw these cap screws into the three tapped holes in the impeller shroud. The cap screws will tighten against the seal head (52), thus forcing the impeller from the shaft. Lift the impeller key (18) from its seat in the shaft.

5. To remove the pump casing (45), remove casing cap screws (2). Casing and seal head gasket (29) will lift off the support head (1). Place gasket in water.

6. The seal head can be removed after loosening bolts and nuts (27-28).

D. TO INSPECT OR REPLACE BALL BEARING OR SHAFT
(Best performed with pump removed from HydroSeeder)

1. Dismantle liquid end of pump as described in Section C, then loosen set screws in pump half of drive coupling and remove coupling from pump shaft. Also remove key (17) from shaft.

2. Unscrew bearing cover cap screws (6) and remove bearing cover (4), gasket (5) and bearing adjusting spring (7). Place gasket in water. Pull the pump shaft (15) out thru the coupling end of the support head (1). Slinger (14) will drop into support head drip basin. Be careful not to lose it.

3. By inspection, determine whether it is necessary to replace the ball bearings (20) and (21). If so, press on inner race of the shielded side of the bearing and not against the outer race of the bearing or the shaft shoulder.

E. REASSEMBLING OF SHAFT AND BEARINGS

1. To replace bearings, slide bearing (21) over the coupling end of the shaft (shielded side first) until the inner race is tight against the shaft shoulder. Then slide bearing (20) onto the tapered end of the shaft, shielded side first, until the inner race is tight against shaft collar. Apply fresh grease, of the proper grade, between the races of each bearing. Also fill bearing housings in the support head about 1/4 full of grease. Never use any of the old grease.

2. Inspect felt ring (9) in the bearing cover (4) and in the bearing adjusting nut (8). To replace felt rings remove clamping rings (13) and insert new felt rings. Press clamping rings into position.

3. Insert shaft (15) into support head, from the coupling end, tapered end first. When shaft starts thru bearing adjusting nut (8), place slinger (14) over the end of the shaft. Push shaft thru support head until bearing is tight against the bearing adjusting nut. Place bearing adjusting spring (7) over coupling end of shaft and place bearings cover gasket (5) on bearing cover. Slide bearing cover over end of shaft and push against end of support head compressing bearing adjusting spring sufficiently to replace bearing cover cap screws (6). Tighten cap screws securely. Place shaft key (17) in keyway on end of pump shaft and press pump half of drive coupling onto shaft. Tighten set screws.

F. REASSEMBLY OF LIQUID END

1. If the seal head (52) was removed, place seal head over shaft in manner shown with slots for bolts and nuts on the horizontal centerline when the holes in the flange of the seal head are in line with those of the support head (1).

2. Insert casing cap screws (2) thru holes in support head and seal head and position seal head gasket (29) on the seal head. Place casing (45) on the support head with discharge in the desired position. Tighten casing cap screws securely.

3. Seat impeller key (18) in shaft keyway and place impeller (47) on shaft with keyway over impeller key. Place a wooden block over impeller vanes and tap on wood to seat impeller on the shaft taper. Replace impeller washer (19) on the shaft and then the castellated nut (16). Tighten nut securely. DO NOT USE IMPELLER NUT TO DRAW IMPELLER ONTO SHAFT. NUT IS A LOCKING DEVICE ONLY.

3.5 Replace cotter pin (64) in castellated nut.

4. Position suction head gasket (48) on suction head (46) and replace suction head on the casing. Fasten in place with suction head cap screws (39).

5. Replace gland bolts and nuts (27-28) and tighten "finger tight." Check impeller adjustment per Section B and replace bearing adjusting nut clip (10) and screw (11).

G. TO REPLACE DOUBLE MECHANICAL SEAL

NOTE: Seals are available as a complete assembly only.

1. Special precautions must be observed when handling a mechanical seal. Do not drop the seal face carbons or floating seats nor scratch the lapped faces for these pieces.

2. To remove the seal assembly, dismantle the liquid end of the pump as described in Section F, then unscrew gland bolts and nuts (27-28). Remove seal head casting (52) from the support head, exposing the seal assembly. Grasp the seal firmly by hand and twist it on the shaft to break the seal between the bellows and the shaft. The seal can now be pulled from the shaft. Also remove the seal gland (56) from the shaft. Place gland gasket (6) in water. Press seat gaskets (D) and floating seat (E) from the seal gland (56) and seal head (52).

3. To install new seal assembly, oil the outer surface of seat gasket (D) and press seat gasket and floating seat assembly (D and E) into the seal gland cavity. Also apply oil to the outer surface of seat gasket and press seat gasket and floating seat assembly into the cavity in the base of the seal head (52). DO NOT SCRATCH FACE OF FLOATING SEATS.

4. Apply a thin coating of light oil (not grease) to the shaft and inside of bellows then slide the seal gland assembly (56) onto the shaft, followed by the gland gasket (6), then the seal face carbon (F), with retainer (G) and bellows (J). (It may be necessary to use a piece of tubing, slightly larger than the shaft, to push the bellows and retainer onto the shaft. Apply pressure only on the "tail section" of the bellows and retainer.) Next, place the spring (H) over the first section of the seal already on the shaft; then, slide the second bellows, retainer and seal face carbon onto the shaft.

5. Carefully wipe the lapped faces of the two floating seats (E) and the seal face carbons (F) to remove any foreign matter from the surface and oil all four faces. Next, place the seal head (52) over the shaft with slots for bolts and nuts (27-28) on the horizontal centerline when the holes in the flange of the seal head are in line with those of the support head. Insert casing cap screws (2) through holes in the support head and seal head and position gasket (2) on seal head. Complete assembly of liquid end as described in Section F.

HYDRAULIC SYSTEM

The hydraulic system on your Finn HydroSeeder is designed to give trouble free service, if maintained. The most important areas of maintenance are the hydraulic oil and filtration. The reservoir holds 11 gallons of Mobil DTE25 or Gulf 46AW or Shell-Tellus 46 hydraulic oil or equivalent. The hydraulic oil should be replaced per the lubrication schedule or if the oil becomes milky or it gives off a burnt odor. The hydraulic oil filter must be replaced on schedule with a 10 micron filter - Finn part #21618.

TROUBLE SHOOTING THE HYDROSEEDER . . . POSSIBLE PROBLEM AREAS

Because of the tremendous work load usually placed upon the HydroSeeder, minor malfunctions may occur from time to time. If these are not remedied immediately they could lead to low quality performance or damage to the equipment. This section describes the possible problem and the action be taken to remedy them.

1. FOAMING IN THE SLURRY TANK

   A. The mixture of the dry materials with water will, sometimes, cause excessive foaming in the slurry-tank and causes erratic discharge of the slurry. There are several remedies:
      1. Pour 2 or 3 ounces (4 or 6 Cl.) of an anti-foaming agent into the slurry-tank.
      2. Slow the agitator speed down to the speed at which no air is being beaten into the slurry.
      3. On slurries with little or no fiber length partially close recirculation valve.

2. PLUGGING OR CLOGGING:

DANGER: Turn off engine before working on equipment. Serious injury or death can result from moving parts or high pressure spray.

Plugging can occur in any one of four places: the discharge nozzle, the recirculation valve assembly, the slurry pump, or the sump area. It is caused by some foreign object or material that has entered the system.

   A. Obstructions in the discharge nozzle, determined by a change, or stopping, of the spray pattern:
      1. Close the discharge valve.
      2. Remove the discharge nozzle.
      3. Clear the nozzle with a cleaning rod or other stick.
      4. Reassemble.

   B. If the recirculation system is not working:
      1. Stop agitator and shut down engine.

DANGER: Severe injury can result from opening clamps when piping is hot. Before loosening any clamps, determine if the pipe is hot. If so, let it cool before attempting repair.

      2. Remove the two clamps on the recirculation valve assembly, and remove the valve. Clear the nozzle, valve assembly, and/or recirculation pipe of the obstruction.
      3. Reassemble, using lubricant on the rubber seals or threads.

   C. Obstruction in the pump. This is determined by a drop in the pressure of the discharge stream.
      1. Stop the engine.
      2. Close the suction shut-off valve.
      3. Remove the clamps on the suction elbow just before the pump.
      4. Remove the elbow and slowly open the suction shut off valve. If no slurry emerges, the stoppage is in the sump area (see "D" below).
      5. Reach into the pump suction opening and remove the obstruction.
      6. Reassemble elbow to pump, install clamp and open suction shut off valve completely.

   D. Obstruction in the sump area. The sump area is located at the inside bottom of the slurry-tank. It can be reached and cleared in two ways:
      1. Stop engine.
      2. Lift the tank lid and reach down into the sump area with a long pole to break up the obstruction.
      3. Remove the drain plug at the rear of the slurry-tank and run a long pole into the sump area to break up the obstruction. Replace the drain plug.

TROUBLE SHOOTING THE HYDROSEEDER

Problem	Probable Causes	Suggested Solutions
LEAKS:		
Tank Seal leaks	Not greased often enough	Replace
Pressure clamps	Rubber seal cracked, pinched or torn.	Replace, always grease rubber before clamping shut.
Pump shaft	Automatic lubricator not serviced or using wrong type grease	Replace pump seal, service automatic lubricator daily. Use soda base grease.
Pump Casing	Casing bolts not tight	Tighten casing bolts to 12 lb. ft. (1.65 kg/m) torque.
	Casing gasket bad	Replace casing gasket, use grease.
Nozzle Camlock fitting	No gasket	Replace gasket
MACHINE JUMPS DURING OPERATION:		
Agitator	Agitator bent by personnel jumping on it.	Straighten agitator or shim, so it runs true.
Bent Paddles	Loading wood fiber mulch into tank before tank is half full.	Straighten agitator paddle realign agitator to run true.
FOAMING OF SOLUTION DURING OPERATION:		
Pump looses prime-lacks distance - leaves excessive amount in tank (50 gal. or more). (189 liters)	Sucking air in suction lines	Check all suction connections to see that rubber seals are in good shape
	Sucking air thru suction valve stem	Tighten packing nut on top of valve
	Low RPM (effects distance only).	Reset engine RPM
	Soft water	Slow agitator
	Too much agitation	Slow the agitator
PLUGGING DURING OPERATION:		
Constant plugging of discharge lines during operation	Foreign material in slurry	Drain and clean out tank. Check storage for foreign materials.
	Recirculation valve closed	Open recirculation valve
	Recirculation plugged	Unplug recirculation system

PLUGGING DURING OPERATION: (cont'd.)

Constant plugging of discharge lines during operation (cont'd.)	Loading HydroSeeder before tank is half full of water	Reinstruct your operator. (See Operator's Manual)
	All the material not in suspension	Increase agitation time
Extension hose, plugs on initial load	Dry hose	Pre-wet hose from water source or with machine before loading.
Extension hose, plugs after use	Letting water run out leaving wood fiber mulch to dry out.	If hose has to be uncoupled, seal ends to keep water in hose and prevent wood fiber mulch from drying out.
Plugging of sump during discharge	All the material not in suspension	Increase agitation time.
	Discharge and/or recirculation nozzles worn	Replace nozzles

PUMP:

Lack of distance	Pump Worn	Reset pump tolerances as per manual
	Low RPM	Check governor, reset RPM of engine
	Suction partially plugged	Clean out suction pipe and sump area
	Foaming of solution	Slow agitator
	Nozzle worn or plugged	Clean nozzles, replace if necessary
	Suction shut-off partially closed	Open suction valve fully
Excessive wear	Fertilizer with highly abrasive filler	Change fertilizer brand
	Overloading machine	Load machine to recommended capacities
	Too much time allowed between loading and discharging	After loading and mixing has been completed, slow engine to 3/4 throttle until ready to discharge. This recirculation time should never exceed 15 minutes.
Will not turn	Frozen	Warm housing to melt ice
	Jammed with fertilizer or lime	Remove cover and clean interior. Check tolerance
	Rust	Pull cover and wear plate remove rust. Reset tolerance

EQUIPMENT REGISTRATION
(SECOND OWNER)

To enable FINN CORPORATION to maintain a record of equipment owners for parts assistance, FINN information mailings and other purposes, we request the completion and return of this form. THANK YOU FOR YOUR COOPERATION.

EQUIPMENT _____ MODEL _____ SERIAL # _____

DATE OF PURCHASE _____ PURCHASED FROM _____

NEW OWNER _____ PHONE ( ) _____

STREET ADDRESS _____ MAIL ADDRESS _____

CITY _____ STATE _____ ZIP _____

DO YOU OWN OTHER FINN EQUIPMENT? YES _____ NO _____

MODEL AND SERIAL NUMBER(S) _____

_____

DO YOU OWN COMPETITIVE EQUIPMENT? YES _____ NO _____ BRAND _____

WHAT IS YOUR PRIMARY BUSINESS? _____

_____

WHEN COMPLETED, PLEASE RETURN PROMPTLY. POSTAGE NOT REQUIRED.

EQUIPMENT REGISTRATION
(FIRST OWNER)

To enable FINN CORPORATION to register your unit for WARRANTY PURPOSES, PARTS ASSISTANCE, and to place you on our FINN information mailing list, please complete. THANK YOU FOR YOUR COOPERATION.

EQUIPMENT _____ MODEL _____ SERIAL # _____

DATE OF PURCHASE _____ PURCHASED FROM _____

OWNER _____ PHONE ( ) _____

STREET ADDRESS _____ MAIL ADDRESS _____

CITY _____ STATE _____ ZIP _____

DO YOU OWN OTHER FINN EQUIPMENT? YES _____ NO _____

MODEL AND SERIAL NUMBER(S) _____

_____

DO YOU OWN COMPETITIVE EQUIPMENT? YES _____ NO _____ BRAND _____

WHAT IS YOUR PRIMARY BUSINESS? _____

_____

PLEASE COMPLETE THE FIRST OWNER REGISTRATION AND RETURN PROMPTLY. POSTAGE NOT REQUIRED.
SECOND OWNER COPY TO REMAIN IN PARTS MANUAL.

NO POSTAGE
NECESSARY
IF MAILED
IN THE
UNITED STATES

BUSINESS REPLY MAIL
FIRST-CLASS MAIL PERMIT NO. 6359 FAIRFIELD, OHIO

POSTAGE WILL BE PAID BY ADDRESSEE

FINN CORP
9281 LESAINT DR
FAIRFIELD OH 45014-9940

NO POSTAGE
NECESSARY
IF MAILED
IN THE
UNITED STATES

BUSINESS REPLY MAIL
FIRST-CLASS MAIL PERMIT NO. 6359 FAIRFIELD, OHIO

POSTAGE WILL BE PAID BY ADDRESSEE

FINN CORP
9281 LESAINT DR
FAIRFIELD OH 45014-9940

FINN CORPORATION

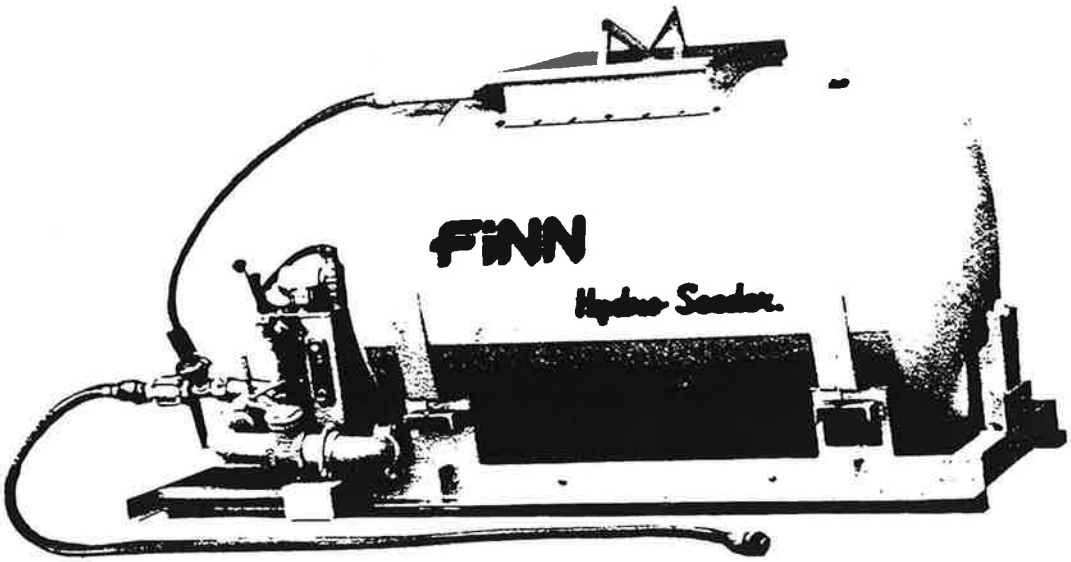

HydroSeeder

PARTS MANUAL

MODEL NO. TL-30 SERIAL No. RO

WARRANTY

Finn warrants to the original Purchaser for use (or rental to others for use) all new construction machinery and attachments therefore manufactured by Finn to be free from defects in material and workmanship for a period of 12 months from date of purchase or 1200 hours of use, whichever comes first. Replacement parts provided under the terms of this warranty are warranted for the remainder of the warranty period applicable to the product in which installed, as if such parts were original components of that product. Finn makes no warranty with respect to (a) allied equipment or trade accessories not manufactured by it (such as, but not limited to tires, ignitions, starters, hose, batteries, magnetos, carburetors, engines or like or unlike equipment or accessories), such being subject to the warranty, if any, provided by their respective manufactures; or (b) secondhand, used, altered, or rebuilt machines. Further, the warranty herein expressed shall be rendered null and void to the extent any defect or failure of the products warranted hereby arises out of or is caused by accessories or component parts not manufactured or supplied by Finn, whether same are supplied by Purchaser, dealers or any other party. THE WARRANTY DESCRIBED IN THIS PARAGRAPH SHALL BE IN LIEU OF ALL OTHER WARRANTIES, EXPRESS OR IMPLIED, INCLUDING, BUT NOT LIMITED TO, ANY IMPLIED WARRANTY OF MERCHANTABILITY OR FITNESS FOR A PARTICULAR PURPOSE.

Upon notification of Finn during the above-stated warranty period of any failure to conform to this warranty, and upon inspection by Finn to verify said nonconformity and verify the continuing existence of the warranty period, Finn will provide a new part or a repaired part, whichever Finn elects, to replace the part found to be defective. Such parts will be provided without charge to the Purchaser during normal working hours at a place of business of a Finn dealer or other establishment authorized by Finn to effect said repairs or replacements, but Purchaser shall bear all costs of transporting the product to and from such place of business or establishment. Correction of nonconformities, in the manner and for the period time provided above, shall constitute fulfillment of all liabilities of Finn under this contract.

THE REMEDIES OF THE USER SET FORTH HEREIN ARE EXCLUSIVE, WITHOUT REGARD TO WHETHER ANY DEFECT WAS DISCOVERABLE OR LATENT AT THE TIME OF DELIVERY OF THE PRODUCT TO THE PURCHASER. The essential purpose of this exclusive remedy shall be to provide the Purchaser with repair or replacement of parts that prove to be defective within the period and under the conditions previously set forth. This exclusive remedy shall not have failed of its essential purpose (as that term is used in the Uniform Commercial Code) provided Finn remains willng to repair or replace defective parts within a commercially reasonable time after it obtains actual knowledge of the existence of a particular defect.

IN NO EVENT SHALL FINN BE LIABLE FOR ANY SPECIAL, CONSEQUENTIAL, INCIDENTAL OR INDIRECT DAMAGES, INCLUDING LOST PROFITS OR LOST COMMERCIAL OPPORTUNITIES, WITH RESPECT TO THE SALE OF THE ABOVE WARRANTED PRODUCT OR ANYTHING DONE IN CONNECTION THEREWITH, OR FOR PROPERTY DAMAGE SUSTAINED BY A PERSON CLAIMING TO BE A THIRD PART BENEFICIARY OF A SURVIVING WARRANTY UNDER THE LAW OF ANY JURISDICTION.

NOTICE

FINN CORPORATION URGES THE USE OF ONLY FINN CORPORATION SUPPLIED PARTS AND ATTACHMENTS TO ASSURE PROPER PERFORMANCE AND SAFE OPERATION OF FINN CORPORATION EQUIPMENT. INSIST ON PARTS AND ATTACHMENTS MANUFACTURED OR SUPPLIED BY FINN CORPORATION WHEN YOU PURCHASE, REPAIR OR REPLACE YOUR FINN EQUIPMENT AND ATTACHMENTS.

BECAUSE FINN CORPORATION CANNOT ASSURE THAT PARTS AND ATTACHMENTS NOT MANUFACTURED OR SUPPLIED BY FINN MEET FINN CORPORATION'S QUALITY STANDARDS, SPECIFICATIONS, OR OPERATING REQUIREMENTS, OUR WARRANTY IS NOT EFFECTIVE TO THE EXTENT ANY FAILURE OF OR DEFECT IN A FINN CORPORATION PRODUCT ARISES FROM OR IS CAUSED BY PARTS, ATTACHMENTS OR COMPONENTS NOT ORIGINATING WITH FINN CORPORATION. USE OF FINN CORPORATION EQUIPMENT WITH PARTS AND ATTACHMENTS NOT MANUFACTURED OR SUPPLIED BY FINN COULD RESULT IN PERSONAL INJURY.

Effective December 8, 1995

CALIFORNIA

Proposition 65 Warning

Diesel engine exhaust and some of its constituents are known to the State of California to cause cancer, birth defects, and other reproductive harm.

INDEX

LUBRICATION INSTRUCTIONS

SERVICE DAILY: Generally means service every 10 hours.

SERVICE WEEKLY: Generally means service every 50 hours.

PRESSURE LUBRICATOR
Must be kept filled during operation. Check each time machine is started. Lack of attention will result in premature seal failure. Keep clean at all times. Use Soda Base grease.

TANK SEALS
Grease at end of each day's operation using chassis lubricant.

ENGINE CRANK CASE
Check oil level daily. Oil level is to be maintained.
Change oil every 50 hours (follow instructions in engine manual).

PUMP
Grease pump bearings every 50 hours using chassis lubricant.
DO NOT OVERFILL.

OIL FILTER
Replace oil filter every 100 hours of operation (follow instructions in engine manual).

HYDRAULIC SYSTEM
Check fluid level - change oil and filter if milky or after 500 hours. Use Gulf 46AW, Mobile DTE25, or Shell-Tellus 29 (or equivalent ISO grade 46 hydraulic oil).

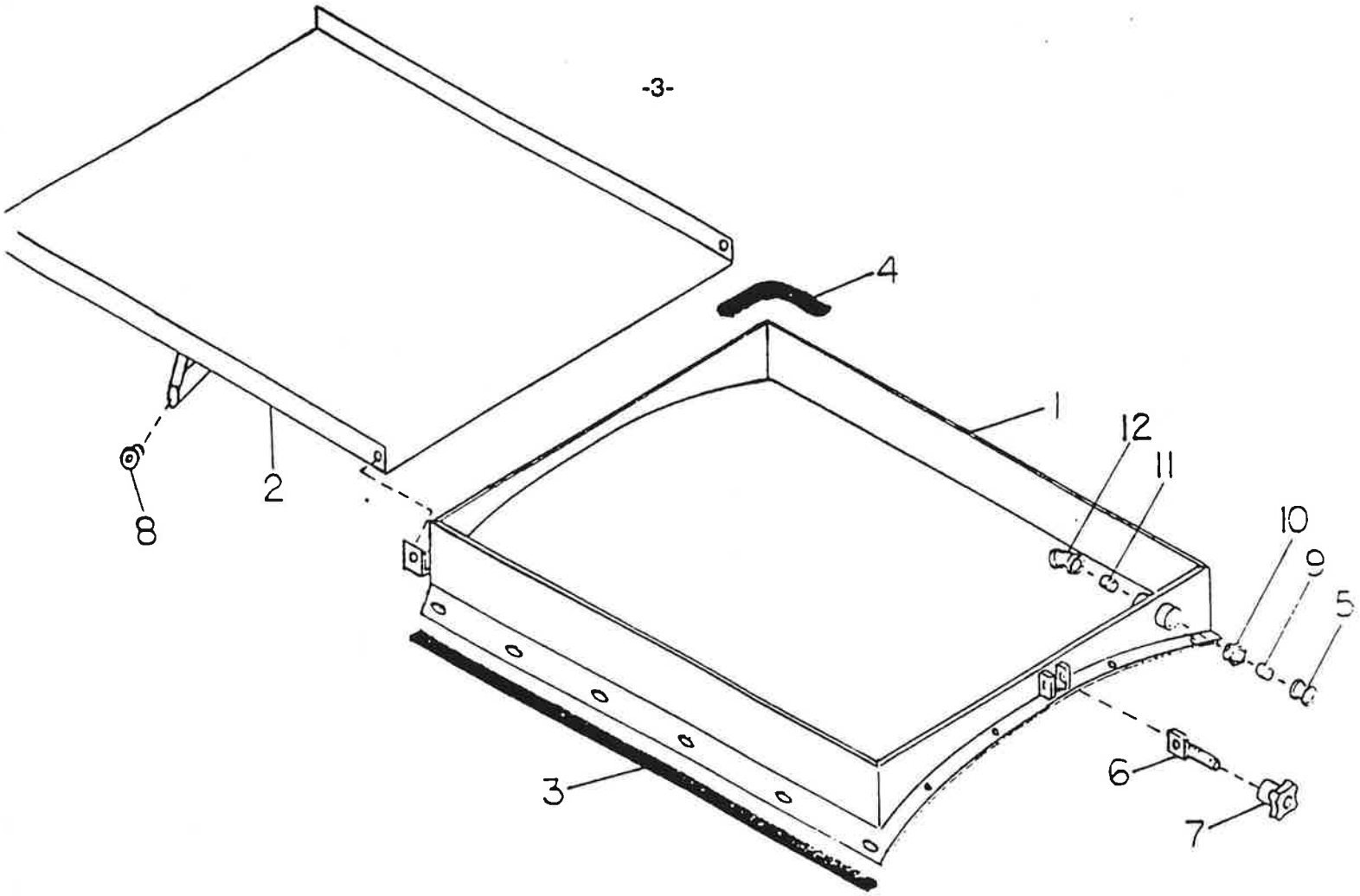

HATCH ASSEMBLY

Ref. No.	Part No.	Description	No. Req'd.
1	085037	Hatch Liner	1
2	085038	Hatch Lid	1
3	190044	Gasket, Hatch Liner	7-1/4 ft.
4	190087	Seal, Hatch Lid	7-1/4 ft.
5	080095	Male Adapter	1
6	085038-05	Hold-Down Stud	1
7	070583	Knob	1
8	085038-07	Plastic Pipe Plug	2
9	160305	Nipple	1
10	160750	Reducer Bushing	1
11	160307	Nipple	1
12	160038	45 deg. Elbow	1

WHEN ORDERING PARTS, BE SURE TO STATE SERIAL NUMBER OF MACHINE

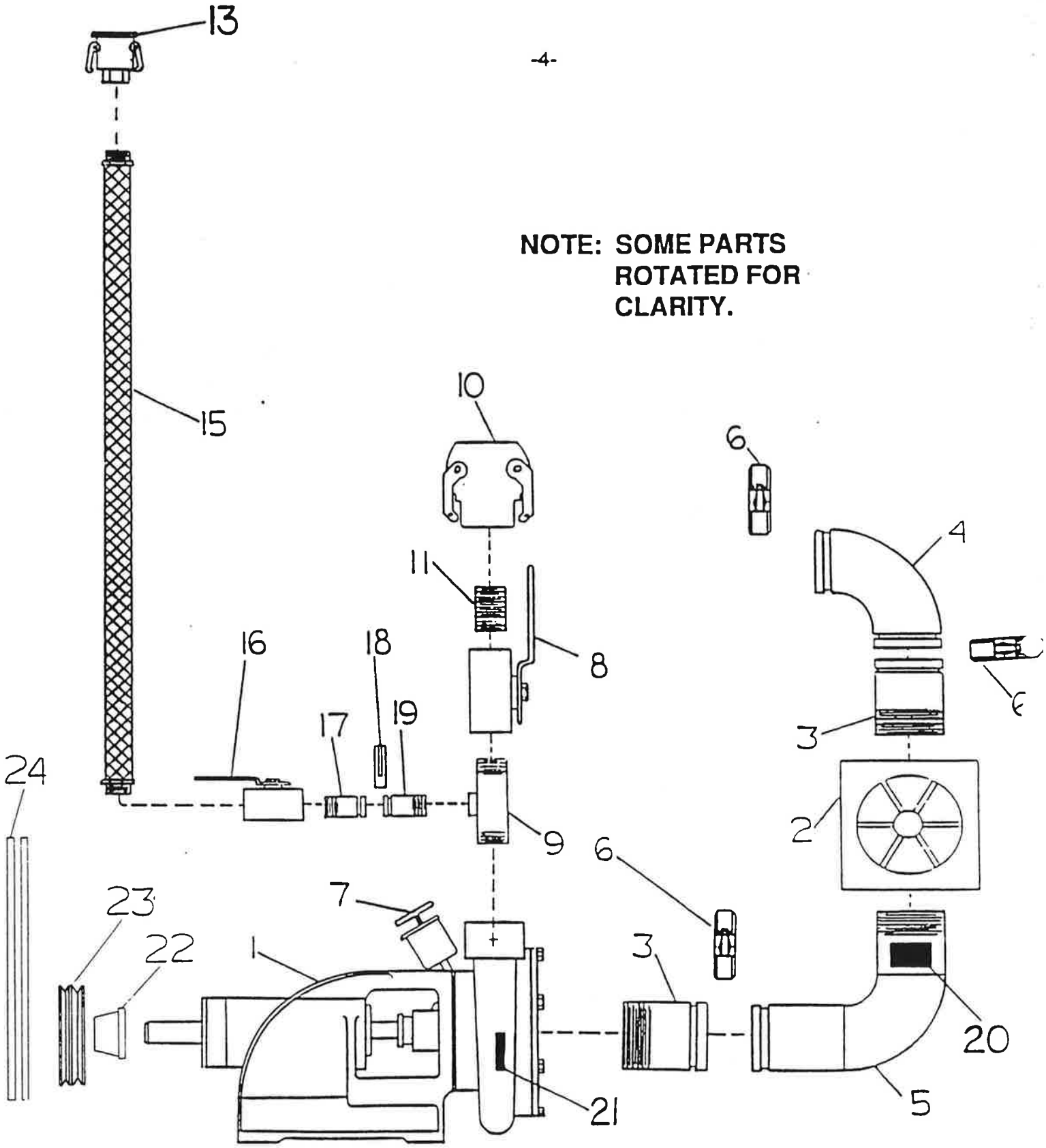

NOTE: SOME PARTS ROTATED FOR CLARITY.

WHEN ORDERING PARTS, BE SURE TO STATE SERIAL NUMBER OF MACHINE

SUCTION AND RECIRCULATION

Ref. No.	Part No.	Description	No. Req'd.
1	080331	Slurry Pump (See page 15 for parts)	1
2	004737	Shut-Off Valve	1
2A	085056-01	Shut-Off Valve Handle	1
3	080364-08	Connector Pipe	2
4	002868	Elbow	1
5	085060-01	Connecting Pipe Elbow	1
6	080366	Pipe Clamp	1
	002439	Seal, Pipe Clamp	1 per
7	002383	Pressure Lubricator	1
7A	160322	Nipple (Not Shown)	1
7B	160697	Bell Reducer (Not Shown)	1
8	085028	Ball Valve	1
9	080364-12	Recirculation Tee	1
10	080377	Female Coupler	1
	080262	Gasket, Coupler	1
11	160309	Close Nipple	1
13	080094	Female Coupler	1
	080262	Gasket, Coupler	1
15	085079	Recirculation Hose	1
16	085027	Ball Valve	1
17	005083-08	Recirculation Connector	1
18	005156	Pipe Clamp	1
	005183	Seal, Pipe Clamp	1 per
19	005083-07	Recirculation Nozzle	1
20	008209	Decal "Danger-Before Loosening Clamps"	1
21	007607	Decal "Drain Water"	1
22	021677B	Bushing	1
23	085100	Sheave	1
24	085101	Belts - Matched Set of 2	1

** All Other Decals Can Be Found On pages 10 & 11. **

WHEN ORDERING PARTS, BE SURE TO STATE SERIAL NUMBER OF MACHINE

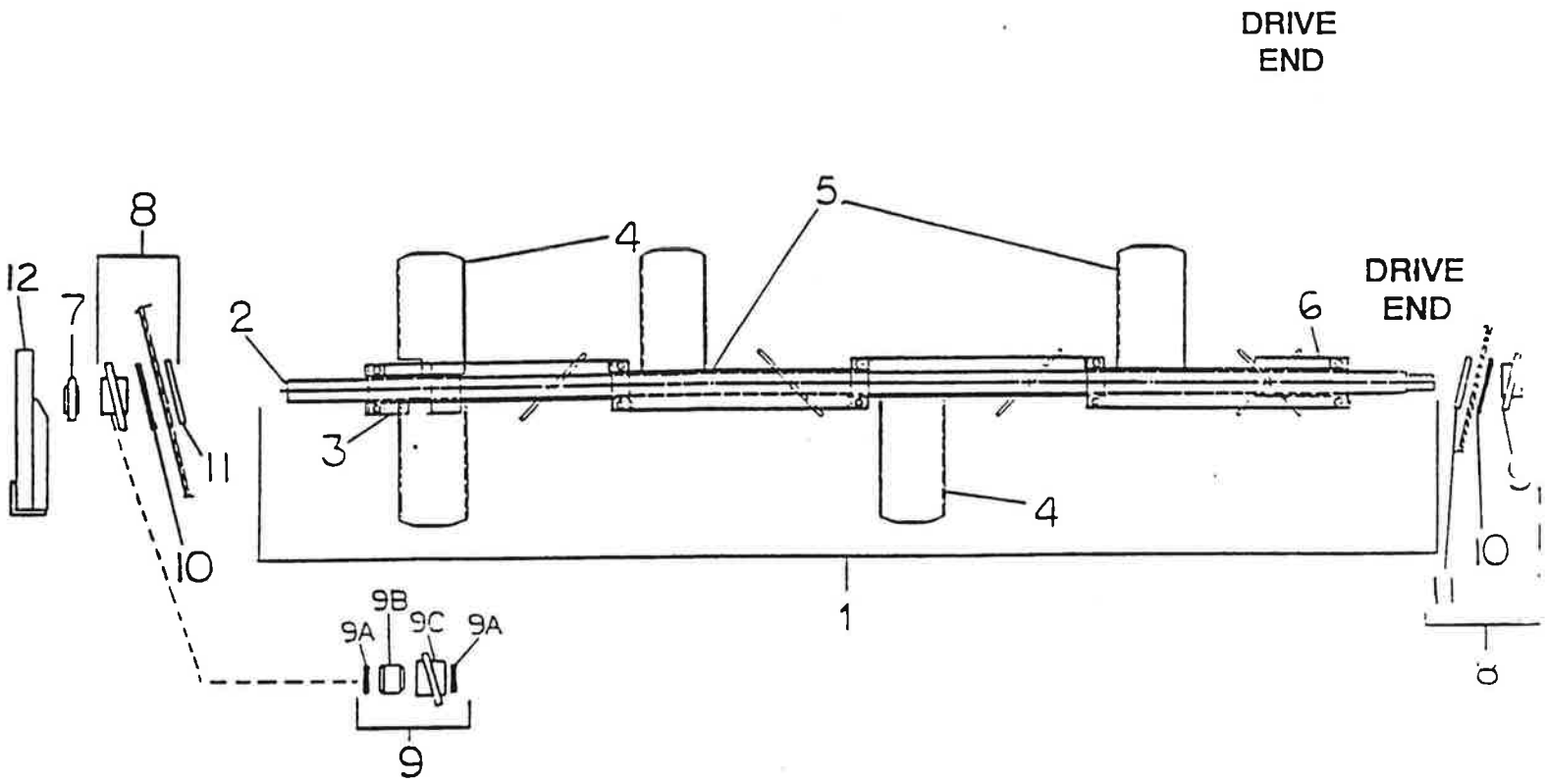

AGITATOR ASSEMBLY

Ref. No.	Part No.	Description	No. Req'd.
1	085052	Agitator Assembly	1
2	085051-02	Agitator Shaft	1
3	085050-03	Front Paddle Section with Notch	1
4	085050-01	Center Paddle Section	2
5	085050-10	Center Paddle Section with Key	2
6	085050-02	Rear Paddle Section	1
7	085031	Bearing	1
8	085074	Agitator Seal Assembly	2
9	085051-01	Agitator Seal Flange Assembly	1 per
9A	085020	Seal	2 per
9B	085051-03	Bushing	1 per
9C	085051-10	Housing	1 per
10	085026	Agitator Seal	1 per
11	085036	Flange	1 per
12	085044-02	Front Bearing Support	1

WHEN ORDERING PARTS, BE SURE TO STATE SERIAL NUMBER OF MACHINE

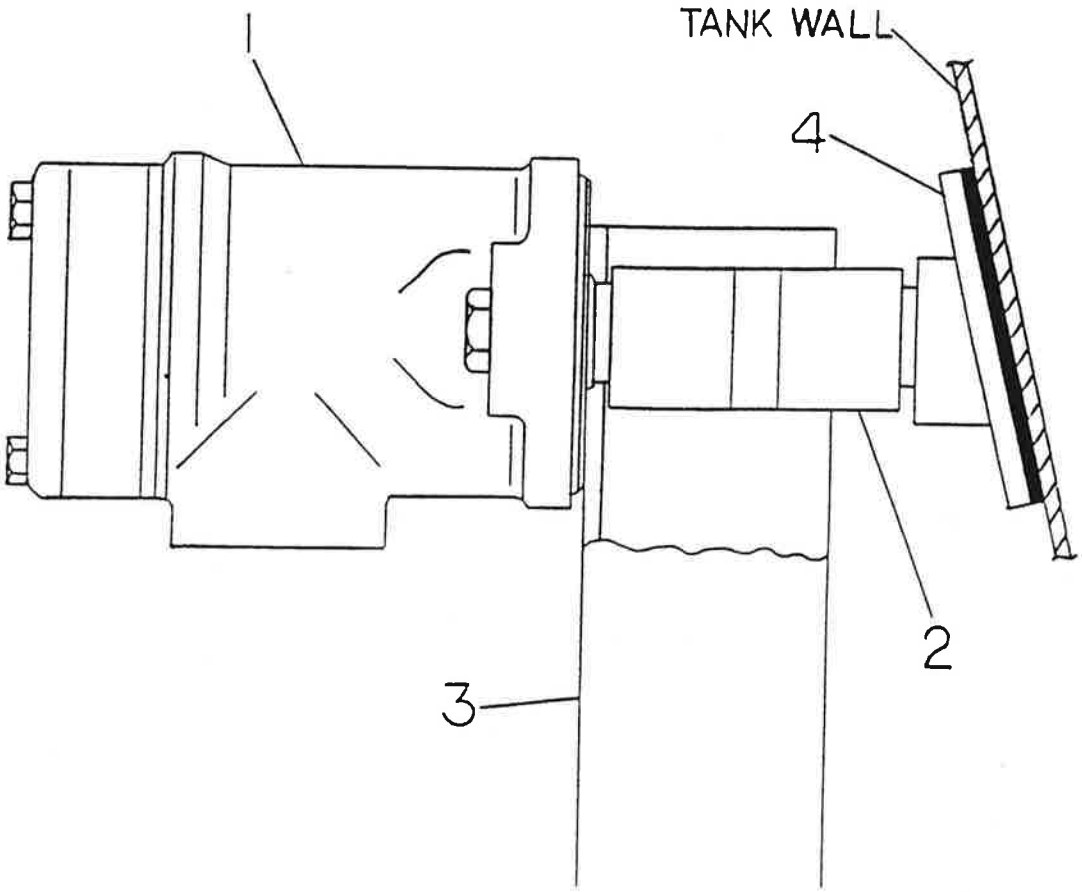

HYDRAULIC AGITATOR DRIVE

Ref. No.	Part No.	Description	No. Req'd.
1	085010	Hydraulic Motor (See page 16 for parts)	1
2	085022	Coupling, Sleeve	1
3	085044-01	Hydraulic Motor Support	1
4	085074	Agitator Seal Assembly (See page 6 for parts)	2

WHEN ORDERING PARTS, BE SURE TO STATE SERIAL NUMBER OF MACHINE

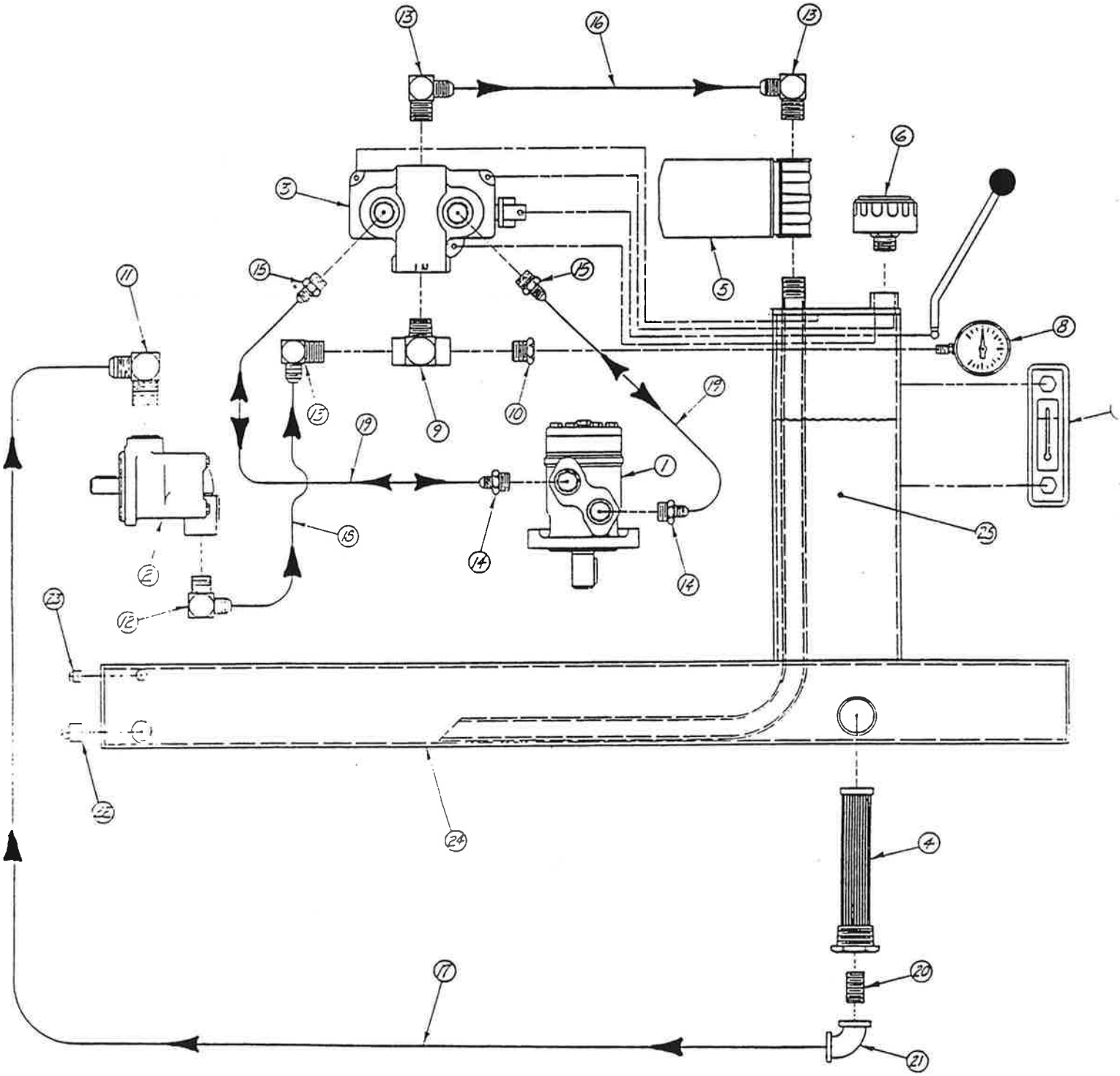

WHEN ORDERING PARTS, BE SURE TO STATE SERIAL NUMBER OF MACHINE

HYDRAULIC SYSTEM

Ref. No.	Part No.	Description	No. Req'd.
1	085010	Hydraulic Motor (See page 16 for parts)	1
2	080004B	Hydraulic Pump (See page 17 for parts)	1
3	022850	Hydraulic Valve (See page 18 for parts)	1
4	004618	Suction Strainer	1
5	021617	Return Filter	1
	021618	Element, Filter	1
6	004900	Filler Breather Cap	1
7	080329	Sight Gauge	1
8	012044	Pressure Gauge	1
9	011625	Female Run Tee	1
10	011936	Bushing	1
11	011931	Adapter Union-90 degrees	1
12	080383	Adapter Union-45 degrees	1
13	023617	Adapter Union	3
14	085014	Adapter Union	2
15	085015	Adapter Union	2
16	085016	Return Hose	1
17	085104	Suction Hose	1
18	085103	Pressure Hose	1
19	085019	Motor Hose	2
20	160303	Close Nipple	1
21	160008	Elbow	1
22	160236	Pipe Plug	1
23	160230	Pipe Plug	1
24	085040	Hydraulic Reservoir	1
25	190074	Hydraulic Oil	5 gal.

WHEN ORDERING PARTS, BE SURE TO STATE SERIAL NUMBER OF MACHINE

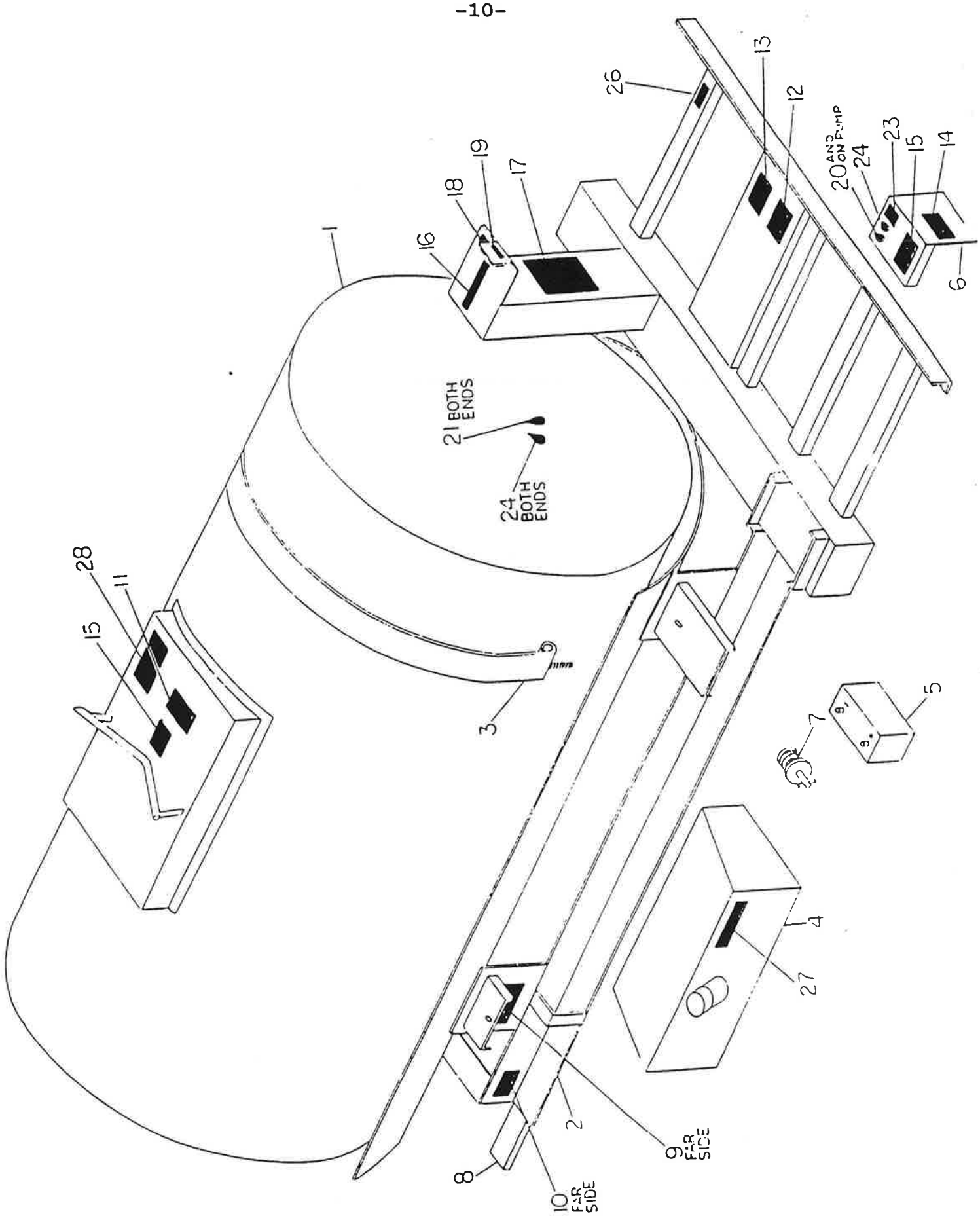
1
2
3
4
5
6
7
8
9 FAR SIDE
10 FAR SIDE
11
12
13
14
15
15
16
17
18
19
20 AND ON PUMP
21 BOTH ENDS
23
24
24 BOTH ENDS
26
27
28

MISCELLANEOUS PARTS & DECALS

Ref. No.	Part No.	Description	No. Req'd.
1	085061	Tank - 300 gallon	1
2	085048	Frame	1
3	085055	Tank Strap	2
4	085041	Fuel Tank	1
4A	085042	Fuel Tank Cradle (Not Shown)	1
4B	003488	Fuel Gauge (Not Shown)	1
4C	190044	Gasket, Fuel Tank (Not Shown)	3-1/2 ft.
5	GGF-235	Battery	1
5A	005161	Rubber Strap (Not Shown)	1
6	085099	Belt Guard - Front	1
	085094-03	Belt Guard - Back	1
7	004593	Drain Plug	1
8	085072	Wood Frame Runners	2
8A	085067	Lag Screw, Wood Frame Runner (Not Shown)	8
8B	085059-01	Sump Weldment (Not Shown)	1
8C	085082	Sump Gasket (Not Shown)	1
		DECALS	
9	011690	Nameplate	1
9A	031235	"FINN" Decal	2
9B	011595	"Hydroseeder" Decal	2
10	011662	U.S. Patent Numbers	1
11	008097	Danger - Before Entering Tank	1
12	011567	Danger - Do Not Aim Stream	1
13	005216	Danger - Do Not Use Remote Valve	1
14	022357	Caution - Turn Off Engine	1
15	023519	Caution - Wear Eye Protection	2
16	023390	Hydraulic Oil	1
17	021665	Hydraulic Instructions	1
18	008286	Agitator Control	1
19	007535	Throttle	1
20	007231	Service Weekly	3
21	007351	Hand Gun Only	2
22*	008209	Danger - Before Loosening Clamps	1
23	006869	Caution - Seal Lubricator	1
24	007230	Service Daily	3
25*	007607	Drain Water	1
26	012031	Valve Operation	2
27	031331	Gasoline	1
28	085078	Operation Instructions	1

* NOTE: Locations are shown on page 5.
NOTE: 080699 7 Decal Kit contains decals with reference numbers 10 through 28.

WHEN ORDERING PARTS, BE SURE TO STATE SERIAL NUMBER OF MACHINE

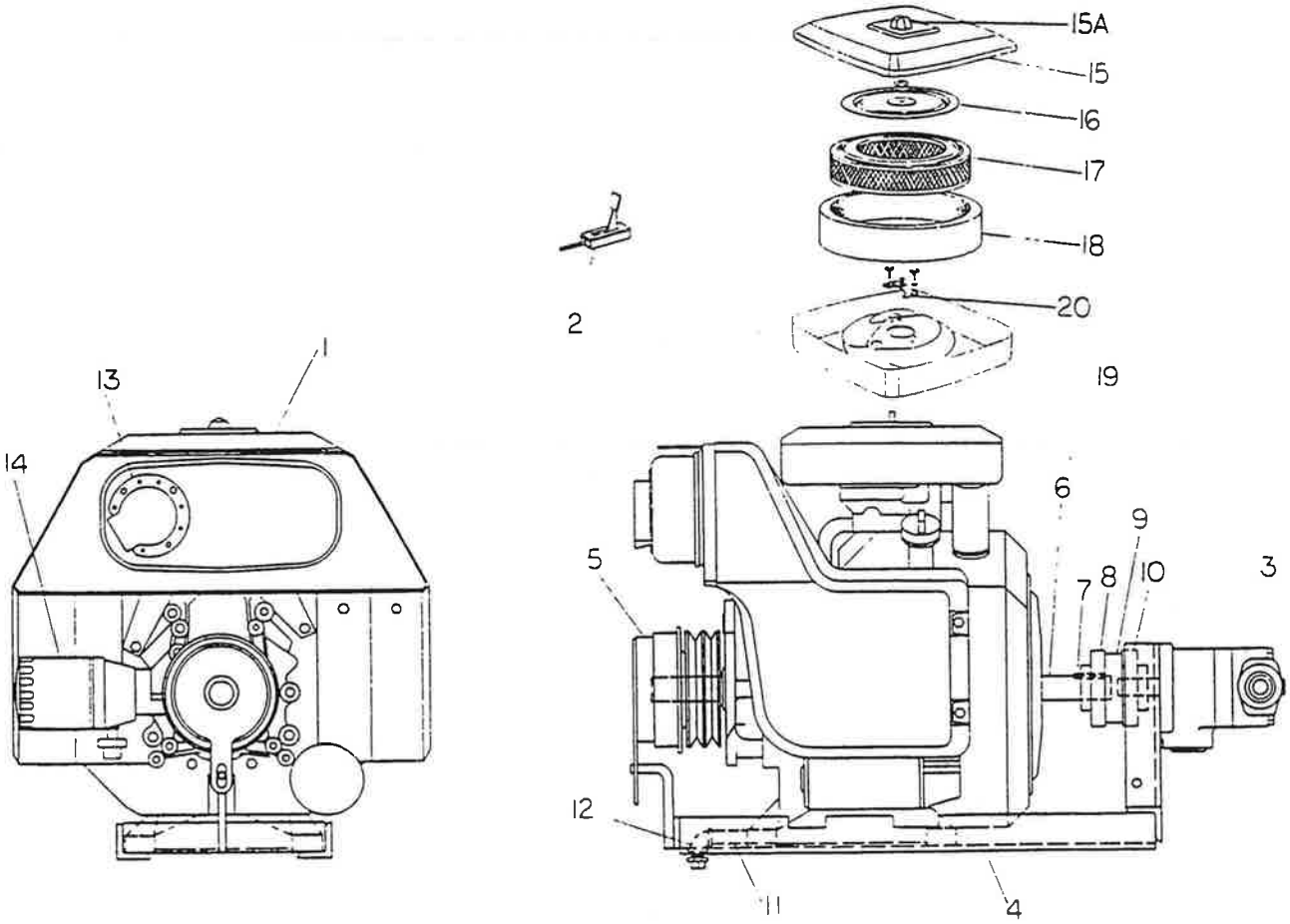

WIRING DIAGRAM

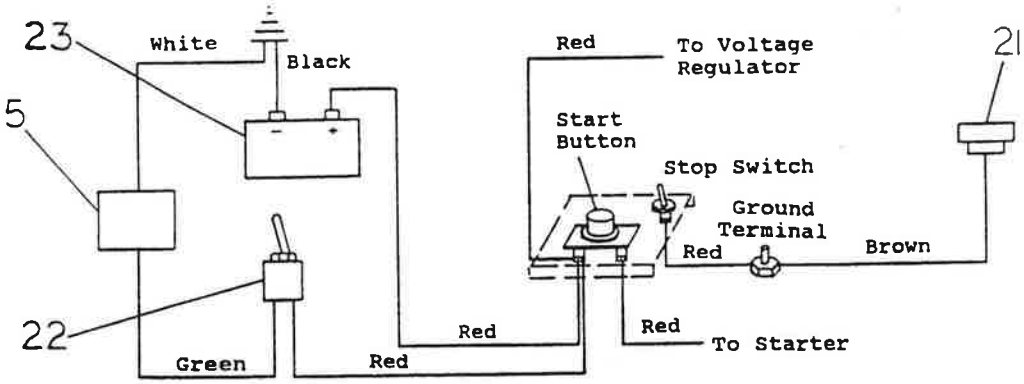

WHEN ORDERING PARTS, BE SURE TO STATE SERIAL NUMBER OF MACHINE

POWER SECTION AND WIRING DIAGRAM

Ref. No.	Part No.	Description	No. Req'd.
1	085007	Engine	1
2	085070	Remote Throttle	1
3	080004B	Hydraulic Pump (see page 17 for parts)	1
4	085097	Engine Sub Frame	1
5	085105	Electric Clutch	1
	085098-08	Spacer Tube, Clutch	1
	085098-10	Washer, Clutch	1
6	085102	Engine Stub Shaft	1
7	023250	Key	1
8	085023	Coupling Half - Engine	1
9	080324	Insert, Coupling	1
10	080323	Coupling Half-Pump	1
11	085060-15	Oil Drain Extension	1
12	160004	90° Pipe Elbow	1
13	BE222573	Muffler Deflector	1
14	BE491056	Oil Filter	1
15	BE223001	Air Cleaner Cover	1
15A	BE493903	Wing Nut	1
16	BE222835	Air Cleaner Plate	1
17	BE394018	Air Cleaner Cartridge	1
18	BE272940	Air Cleaner Pre-Cleaner	1
19	BE222572	Air Cleaner Housing	1
20	BE495077	Air Cleaner Mounting Bolt	1
	BE271411	Air Cleaner Gasket	1
	BERJ19LM	Spark Plug	2
	BE298090	Fuel Filter	1
	085094-04	Coupling Guard	1

Note: BE parts are no longer available through Finn.
Please contact Briggs and Stratton

Wiring Harness
Part No. 085109

21	085071	Temperature Switch	1
22	010531	Toggle Switch	1
	010532	Toggle Switch Boot	1
23	GGF-235	Battery	1

WHEN ORDERING PARTS, BE SURE TO STATE SERIAL NUMBER OF MACHINE

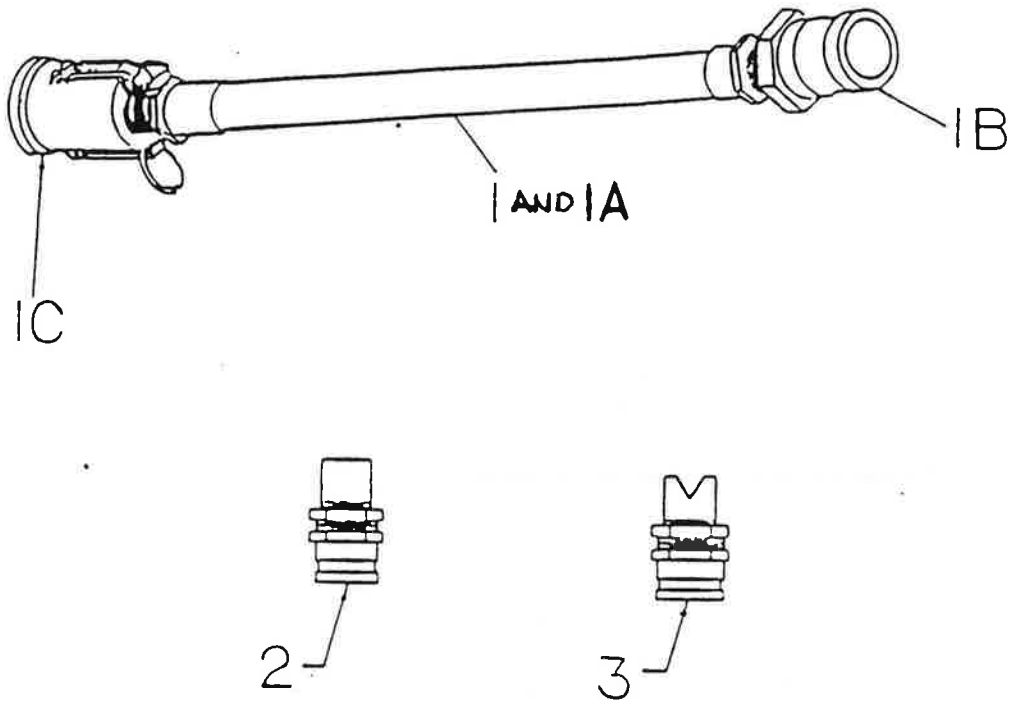

DISCHARGE HOSE AND NOZZLES

Ref. No.	Part No.	Description	No. Req'd.
1	080238-05	Discharge Hose x 50 ft.	1
1A	080238-03	Discharge Hose x 10 ft.	1
1B	080260	Adapter	1
1C	080261	Female Coupler	1
2	080273	Long Distance Nozzle Assembly	1
	080131	Nozzle	1
	160749	Bushing	1
	080260	Adapter	1
3	080272	Fan Nozzle Assembly	1
	080130	Nozzle	1
	160749	Bushing	1
	080260	Adapter	1

TOOL KIT

Part No.	Description	No. Req'd.
000698	Grease, Pump Lubricant	1
008204	Paint, Touch Up	1
004593	Drain Plug	1
	Parts Book, Engine	1
	Operators Manual	1
	Parts Manual	1

WHEN ORDERING PARTS, BE SURE TO STATE SERIAL NUMBER OF MACHINE

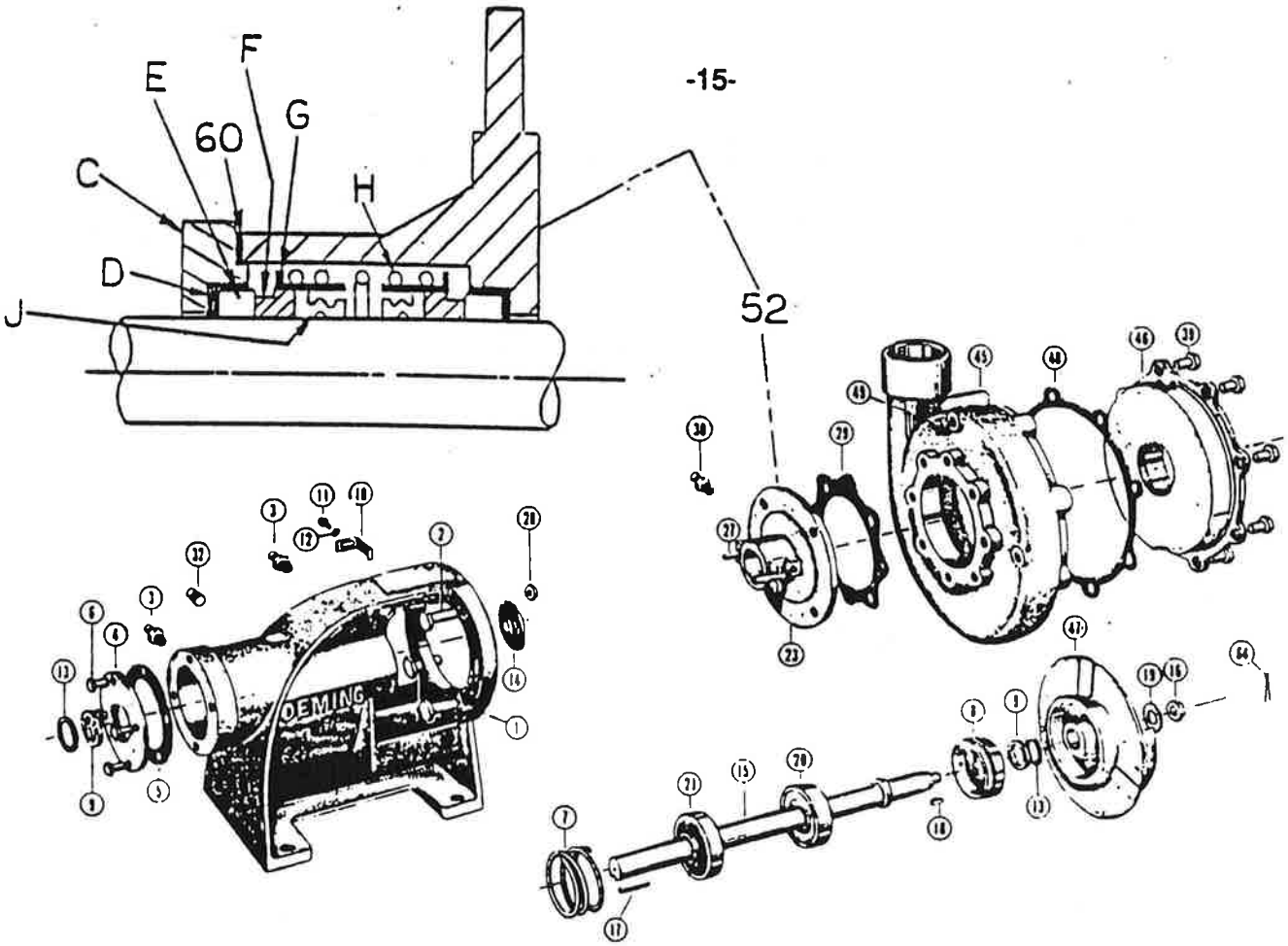

SLURRY PUMP

ASSEMBLY Part No. 80331

Ref. No.	Part No.	Description	No. Req'd.
1	80421	Support Head	1
2		Cap Screws (Casing)	4
3	80432	Grease Fittings	2
4	80424	Bearing Cover	1
*5	80436	Gasket (Bearing Cover)	1
6		Cap Screws (Bearing Cover)	4
7	80437	Bearing Adjusting Spring	1
8	80428	Bearing Adjusting Nut	1
*9	80427	Felt Ring	2
10	80430	Adjusting Nut Clip	1
11		Cap Screws (Adjusting Nut Clip)	1
12		Lock Washer (Adjusting Nut Clip)	1
13	80433	Clamping Ring	2
14	80425	Slinger	1
15	80417	Shaft Assembly (Includes items 16, 18, 19 and 64)	1
16	80422	Castellated Nut	1
17	80426	Shaft Key, Square	1
18	80423	Impeller Key, Woodruff	1
19	80435	Impeller Washer	1
*20	80420	Ball Bearing (Seal Head End)	1
*21	80420	Ball Bearing (Coupling End)	1
27		Bolts (Seal Gaind)	2
28		Nuts (Seal Gland)	2
*29	80431	Gasket (Seal Head)	1
32		Pipe Plug (Support Frame)	1
39		Cap Screws (Suction Head)	8
45	80415	Casing	1
46	80418	Suction Head (3" NPT)	1
47	80416	Impeller	2
*48	80429	Gasket (Suction Head)	1
49		Pipe Plugs (Liquid End)	2
52	80419	Seal Head	1
60	80439	Gasket (Seal Head)	1
64	80434	Cotter Pin	1
C	80438	Seal Gland	1
D		Seat Gasket	2
E		Floating Sea	2
*F	80407	Seal Face, Carbon	2
G		Retainer	2
H		Spring	1

* Suggested Spare Parts

WHEN ORDERING PARTS, BE SURE TO STATE SERIAL NUMBER OF MACHINE

DANFOSS

SPARE PARTS Hydraulic motor OMP

Exploded view OMP

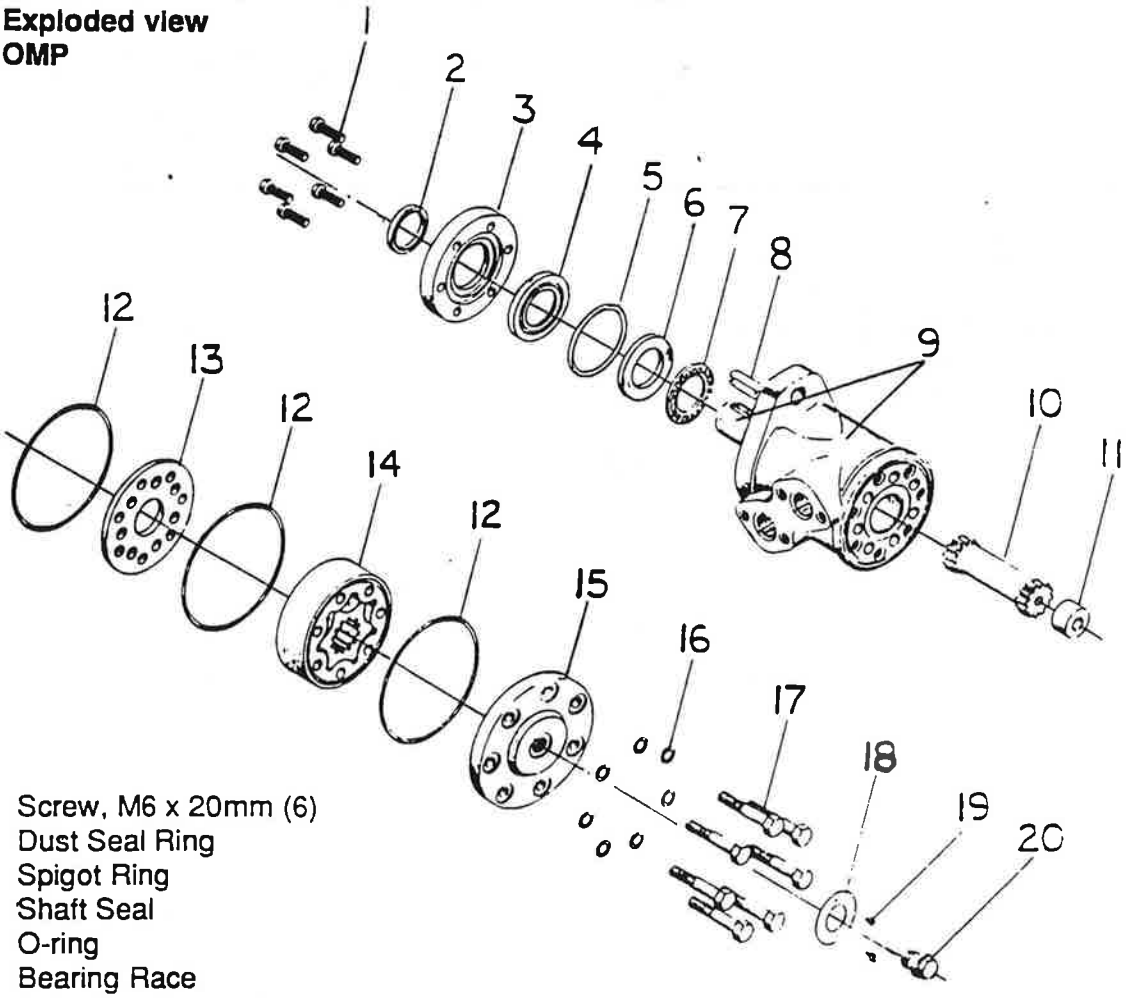

1. Screw, M6 x 20mm (6)
* 2. Dust Seal Ring
3. Spigot Ring
* 4. Shaft Seal
* 5. O-ring
6. Bearing Race
7. Axial Needle Bearing
8. Key
9. Housing and Output Shaft
10. Cardan Shaft
11. Spacer
* 12. O-ring (3)
13. Distributor Plate
14. Gear Wheel Set
15. End Cover
* 16. Washer (7)
17. Screw, M8 x 55mm
18. Nameplate
19. Drive Screw
20. Drain Plug w/O-ring

* Included in replacement Seal Kit, Part No. 85091

WARNING: USE THIS DRAWING FOR PARTS INFORMATION ONLY.

MODEL	* ROTOR	* VANE KIT (12 VANES)	* RING	PIN	SCREW	CART. KIT
V10-**1*-***0	317681	923499	317674	231042	11156	923471
V10-**2*-***0			317675			923470
V10-**3*-***0			317676			923496
V10-**4*-***0	351247	923500	317677	2456	1278	923469
V10-**5*-***0			317678			923468
V10-**6*-***0	357286	923501	355641	351963		923497
V10-**7*-***0			331813			923498

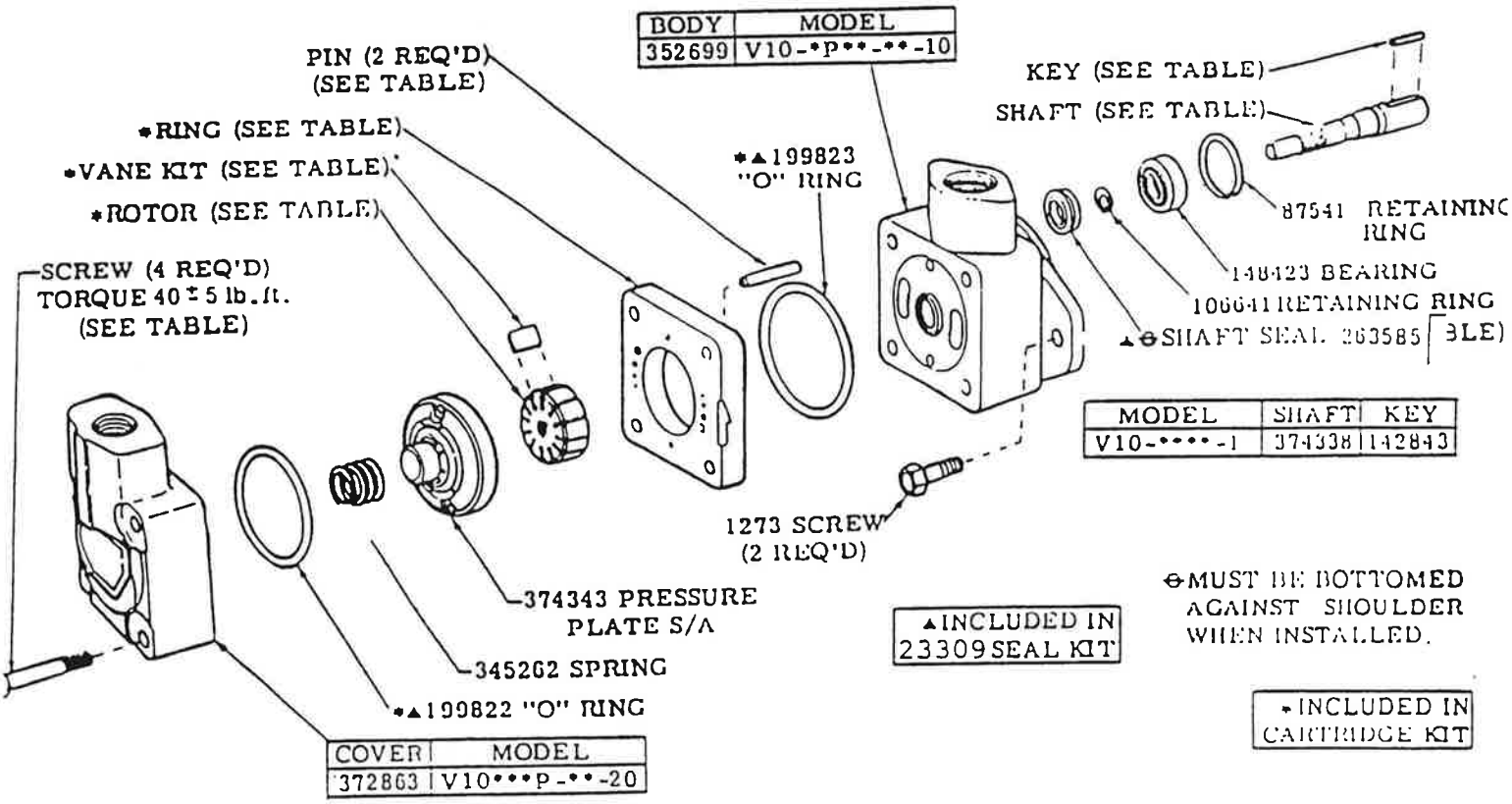

SERVICE PARTS INFORMATION

V10 SERIES - 20 DESIGN

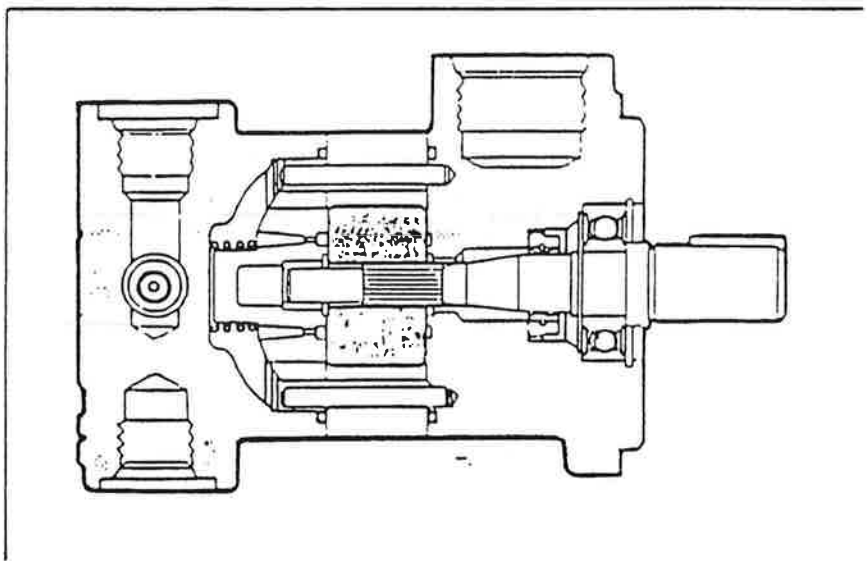

SDCF SERIES VALVE

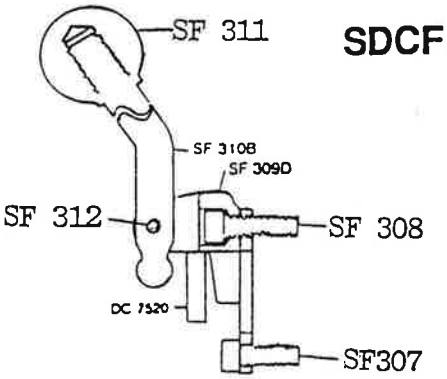

figure 1

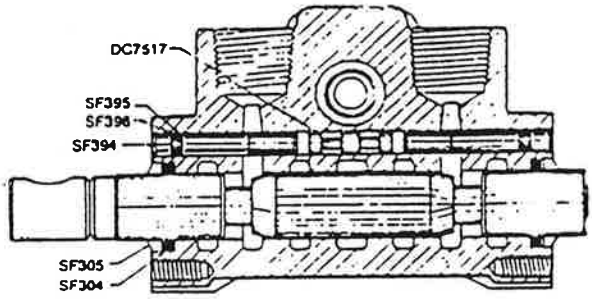

figure 2

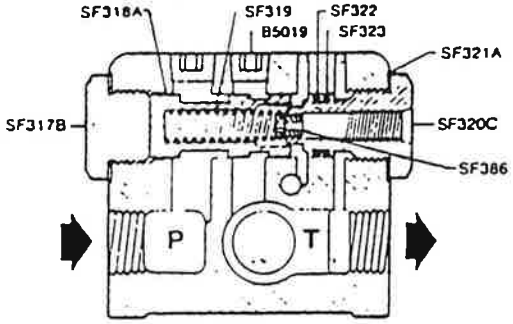

figure 3

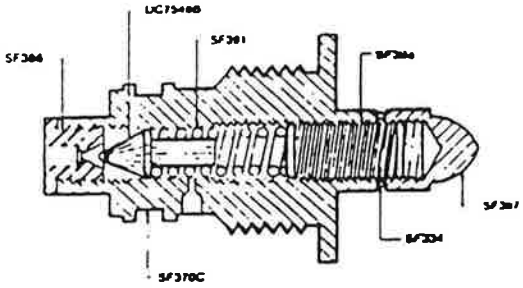

Relief

figure 4

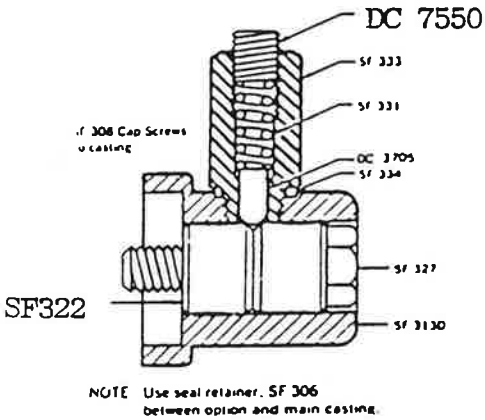

SDC-F (Friction Detent Kit)

PARTS LIST

B5019	Pipe Plug 1/4" NPT	SF318A	Metering Spool
DC3705	Detent Plunger	SF319	Metering Spring
DC7517A	Shuttle Spool	SF320C	Cartridge
DC7520	Roll Pin 3/16 x 1 1/2	SF321A	Washer
DC7548B	Poppet	SF322	"O" Ring - 016
DC7550	Set Screw 5/16-24	SF323	Back Up Ring - 016
SF304	Seal-210	SF327	HHCS 5/16 18 x 1 1/2
SF305	Wiper	SF331	Spring
SF306	Seal Retainer	SF332-1	Friction Positioning Sleeve
SF307	Cap Screw 1/4" 20 x 5/8" HAS	SF333B	Detent Housing -016
		SF334	Washer
SF308	Cap Screw 1/4" 20 x 3/4"HAS	SF370C	Relief Cartridge
		SF386	Seat
SF309D	Handle Bracket	SF387	Acorn Nut
SF310B	Handle	SF388	Set Screw
SF311	Knob	SF391	Spring
SF312	Roll Pin 1/8" x 1 3/8"	SF394	Shuttle Stop
SF312A	Washer	SF395	"O" Ring
SF313-D	Detent End Cap	SF396	Backup
SF317B	Plug	23120	Seal Kit

SPARE PARTS AND REPAIR KITS

SPARE PARTS

Part No.	Description
021618	Filter, Hydraulic Oil
006515	Gasket for 1-1/4" and 1-1/2" Nyglass Coupler
080235	Gasket for 1" Nyglass Coupler
005183	Gasket for 1" Grooved Pipe
002439	Gasket for 3" Grooved Pipe
BE491056	Oil Filter
BE298090	Fuel Filter

REPAIR KITS

023120	Seal Kit for Hydraulic Valve (#022850)
085091	Seal Kit for Hydraulic Motor (#085010)
023309	Seal Kit for Hydraulic Pump (#080004B)

WHEN ORDERING PARTS, BE SURE TO STATE SERIAL NUMBER OF MACHINE